Farm Pro 1331 / 1344 Communication card

P/N: C-AC-2000-C232

This paper details how to connect a Farm Pro 1331 Communication card to the Farm Pro 1331 board

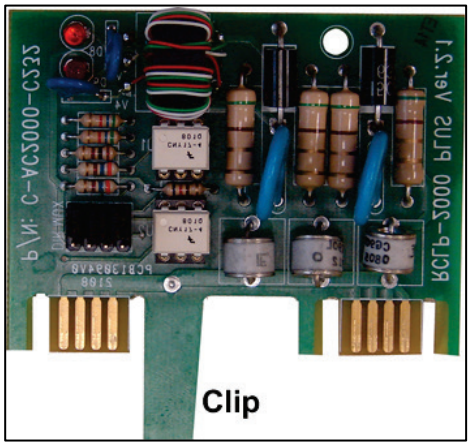

Figure 1: C232 Card

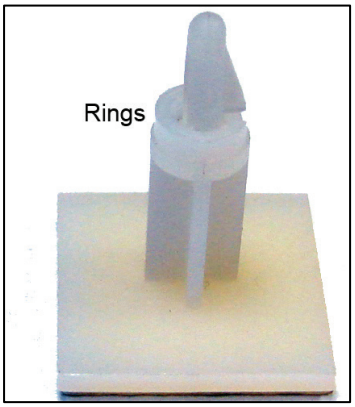

Figure 2: Support Piece

Installation

To install the card:

1. On the card is a hole. Gently insert the support piece into the hole.

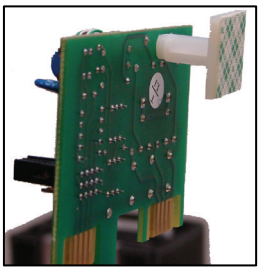

NOTE Do not insert the support piece further than the rings.

2. Place the card, clip facing downward, in the board as indicated in the following illustration.

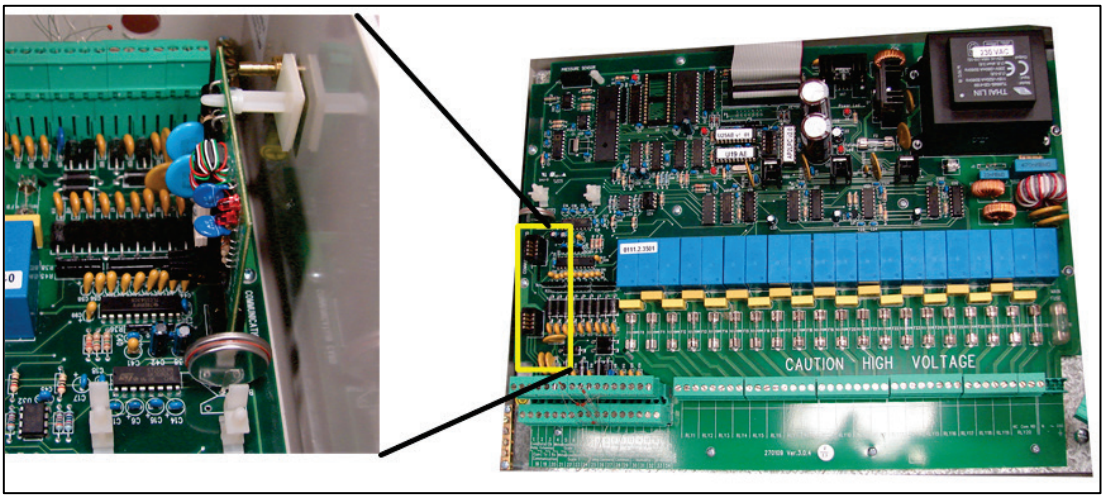

3. Remove the paper from the back of the support piece and attach it to the Farm Pro box.

© Munters AB, 2012 **P/N: 110149**
Ag/MIS/UmGB-2161-12/13 Rev .1.0

Farm Pro 1331 Communication card

P/N: C-AC-2000-C232

This paper details how to connect a Farm Pro 1331 Communication card to the Farm Pro 1331 board

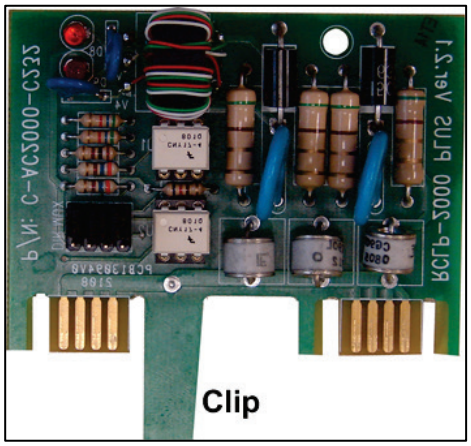

Figure 3: C232 Card

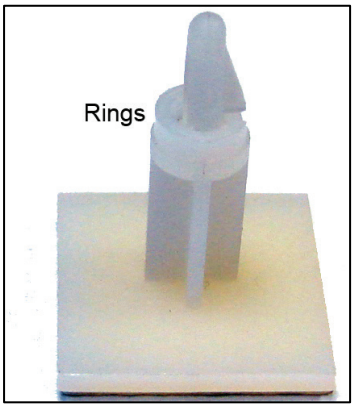

Figure 4: Support Piece

Installation

To install the card:

1. On the card is a hole. Gently insert the support piece into the hole.

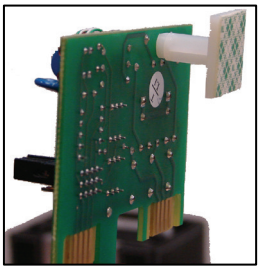

NOTE Do not insert the support piece further than the rings.

2. Place the card, clip facing downward, in the board as indicated in the following illustration.

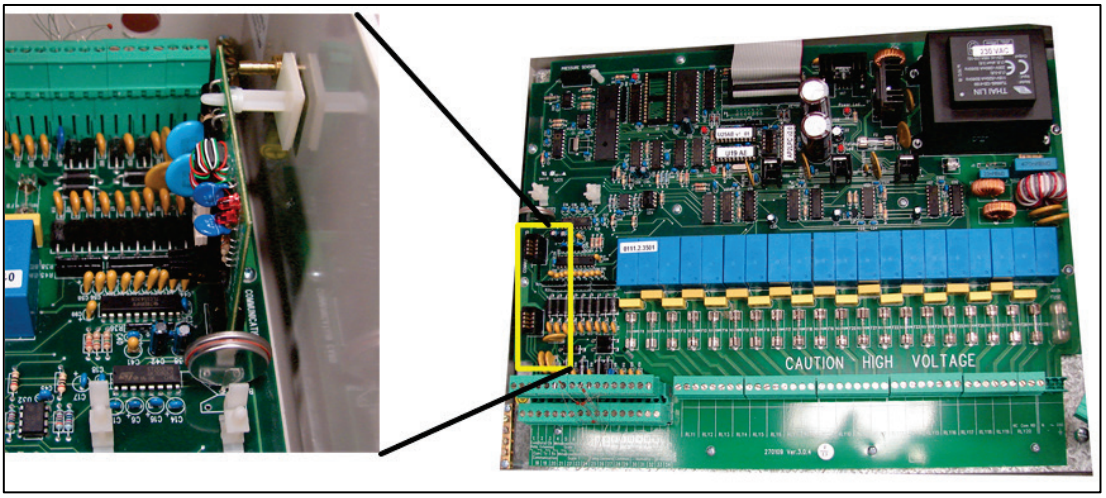

3. Remove the paper from the back of the support piece and attach it to the Farm Pro box.

© Munters AB, 2012 **P/N: 110149**
Ag/MIS/UmGB-2161-12/13 Rev .1.0