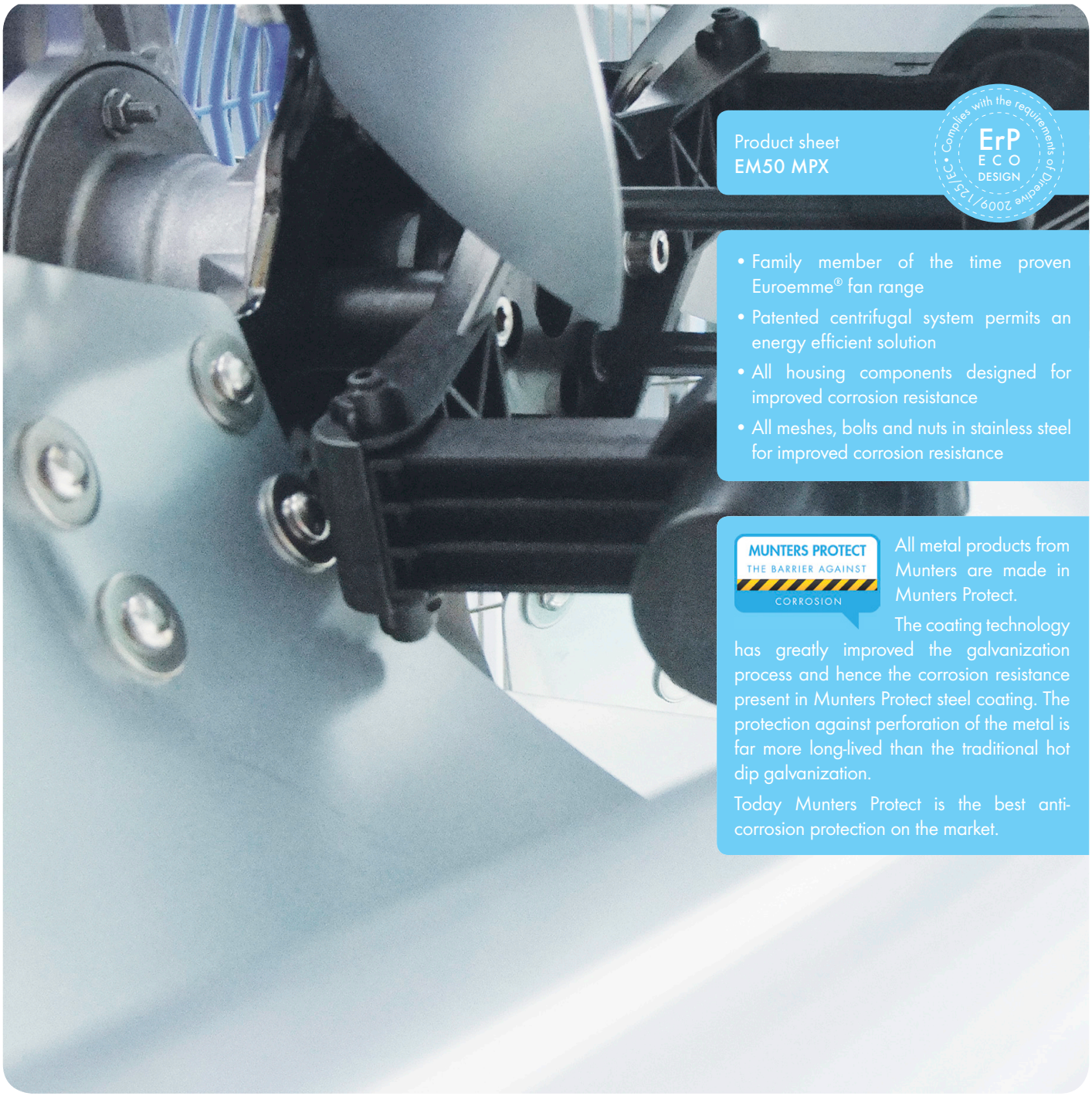

Product sheet
EM50 MPX

ErP ECO DESIGN
• Complies with the requirements of Directive 2009/125/EC •

- Family member of the time proven Euroemme® fan range
- Patented centrifugal system permits an energy efficient solution
- All housing components designed for improved corrosion resistance
- All meshes, bolts and nuts in stainless steel for improved corrosion resistance

MUNTERS PROTECT
THE BARRIER AGAINST
CORROSION

All metal products from Munters are made in Munters Protect.

The coating technology has greatly improved the galvanization process and hence the corrosion resistance present in Munters Protect steel coating. The protection against perforation of the metal is far more long-lived than the traditional hot dip galvanization.

Today Munters Protect is the best anti-corrosion protection on the market.

EM50 MPX

EM50 MPX is a further development of the well-recognized and proven line of Euroemme® box fans and is the ideal exhaust fan whenever extra high airflow capacity is required.
The propeller shape allows the highest efficiency and reliability in any agricultural environment. The square fan housing and air conveyor (Venturi) are made of Munters Protect coated sheet-steel. The fans are equipped with safety meshes, bolts and nuts in stainless steel to allow an increased strenght and a high resistance for installations in swine and calves barns, where the corrosion threat is extremely high. The propeller is attached to pulley which is mounted onto an aluminium hub with an embedded double ball bearing for protection against water ingress. The belt transmission ensures low propeller rpm, which in turn ensures high efficiency and low energy consumption as well as low noise. The fan shutter is tightly closed when the fan is not working, preventing any air leakage through the fan. The patented centrifugal system prevents the shutter from being closed by air pressure. All the plastic parts are made of black acetalic plastic with UV protection. To improve aerodynamic efficiency, the fan has been developed in Munters Italy's R&D lab while the performances were confirmed by tests performed in BESS Lab at the Agricultural Engineering Department of University of Illinois – USA.

EM50 MPX

Munters Italy S.p.A.
Strada Piani 2, IT-18027 Chiusavecchia, Italy / Phone +39 0183 52 11 / Fax +39 0183 521 333 / munters.com

Munters

Dimensions

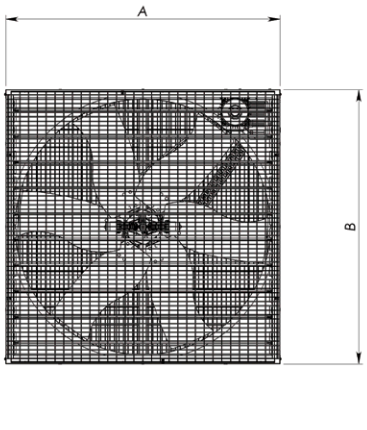

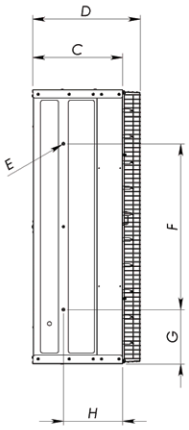

A	B	C	D	E	F	G	H
1,380	1,380	450	540	M8	830	270	295

All measurements are in millimiters.

Airflow

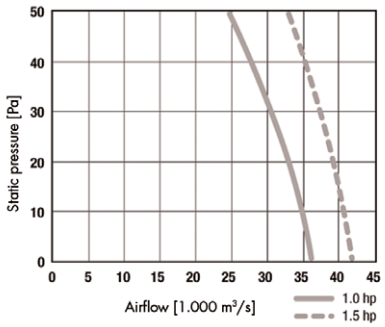

Technical specifications

		1.0 Hp	1.5 Hp
Number of blades		6	6
Number of shutter blades		10	10
Propeller diameter	mm [inch]	1,270 [50]	1,270 [50]
Weight of fully equipped fan[1]	[kg]	84	86
Efficiency grade[2]		40.1	40.3
Airflow at 0 Pa[3]	m^3/h [cfm]	37,000 [21,800]	42,400 [25,000]
Airflow at 25 Pa[3]	m^3/h [cfm]	32,500 [19,200]	38,400 [22,600]
Airflow at 50 Pa[3]	m^3/h [cfm]	26,200 [15,400]	33,800 [19,900]
Specific performance at 0 Pa[3]	m^3/h /W [cfm /W]	33.9 [20.0]	27.0 [15.9]
Max. operating temperature	°C [°F]	50 [122]	50 [122]
Max. operating pressure	Pa	50	50
IEC protective class of electric motor		IP55	IP55
Electric motor winding insulation grade		F	F

[1] *Excludes safety kit for installation below 2.7m above the floor.*
[2] *According to the requirements of the European ErP Ecodesign Directive 2009/125/EC.*
[3] *All declared values are measured and certified by Bess Lab (test #13611 and #13613). Airflow data are measured at standard conditions (20°C, 1,013 hPa).*

Euroemme® EM50 MPX exhaust fan is developed and produced by Munters Italy S.p.A., Italy

Munters

Australia Phone + 61 2 8843 1588, dh.info@munters.com.au, Brazil Phone +55 41 3317 5050, contato@munters.com, Canada Phone +1 517 676 7070, aghort.info@munters.com, China Phone +86 10 8048 3493, marketing@munters.cn, Denmark Phone +45 98 623 311, aghort@munters.dk, India Phone +91 20 6681 8900, info@munters.in, Indonesia Phone +66 2 642 2670, info@munters.co.th, Italy Phone +39 0183 5211, info@munters.it, Japan Phone +81 3 5970 0021, mkk@munters.jp, Korea Phone +82 2 7618 701, munters@munters.co.kr, Mexico Phone +52 818 2625 400, dhinfo@munters.com, Singapore Phone +65 7 446 828, info@munters.com.sg, South Africa and Sub-Sahara Countries Phone +27 11 997 2000, info@munters.co.za, Spain Phone +39 0183 5211, info@munters.it, Sweden Phone +46 8 6266 300, info@munters.se, Thailand Phone +66 2 6422 670, info@munters.co.th, Turkey Phone +90 262 7513 750, info@muntersform.com, USA Phone +1 517 676 7070, aghort.info@munters.com, Export & Other countries Phone +39 0183 5211, info@munters.it

Your closest distributor

Munters reserves the right to make alterations to specifications, quantities, etc., for production or other reasons, subsequent to publication.
© Munters AB, 2016

Euroemme® is a trademark of Munters AB

Ag/MIT/PiGB-2304-01/16 rev 1.0