EC52

Manual for use and maintenance

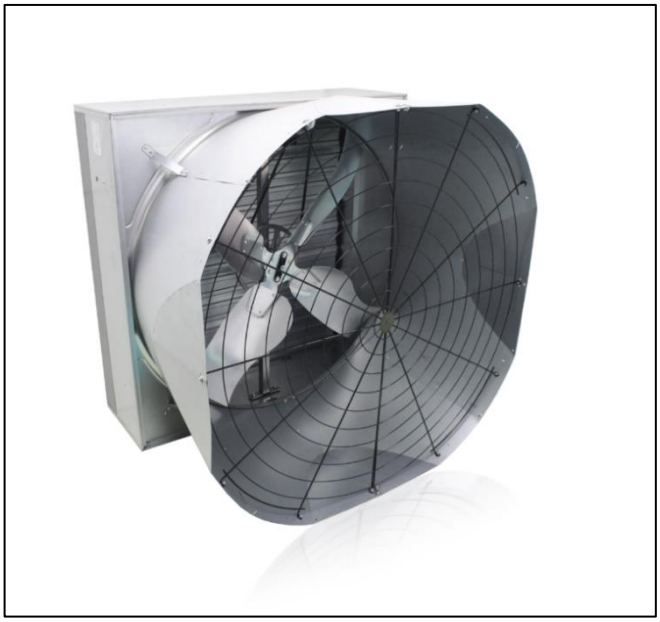

+ CE Declaration of conformity

EC52

Air extraction fan

Ag/MIT/ UmGB-2574-05/18 Rev 1.2

Munters

EC52

Manual for use and maintenance

Original instructions
Revision 1.2

This manual for use and maintenance is an integral part of the apparatus together with the attached technical documentation and has been produced with reference to Directive 2006/42/EC, paragraph A, Annex II, and to ErP Directive 2009/125/CE Commission Regulation 327/2011.
This document is destined for the user of the apparatus: it may not be reproduced in whole or in part, committed to computer memory as a file or delivered to third parties without the prior authorisation of the assembler of the system.
Munters Italy S.p.A. reserves the right to effect modifications to the apparatus in accordance with technical and legal developments and to make alterations to specifications, quantities, etc.,for production or other reasons, subsequent to publication.

Warranty

For Warranty information please refers to "General terms and condition of sale" available on https://www.munters.com/globalassets/terms-and-policies/condizioni_generali_vendita.pdf

Conditions and Limitations:

- Products and Systems involved in a warranty claim under the "General terms and condition of sale" shall have been properly installed, maintained and operated under competent supervision, according to the instructions provided by Munters;
- Malfunction or failure resulting from misuse, abuse, negligence, alteration, accident or lack of proper installation or maintenance shall not be considered a defect under the Warranty.

CONTENTS

1. CE DECLARATION

CE DECLARATION OF CONFORMITY

(complies with Subparagraph A Annex II Directive 2006/42/EC)

Munters Italy S.p.A.

with registered offices in Strada Piani, 2 – 18027 Chiusavecchia (IM) – Italy
(Company Registration nr. 00081050080)

declares on its own responsibility that the apparatus:

Designation	Fan designed for moving air to control temperature and humidity in greenhouses or rearing sheds.
Model	EC52
Year of manufacture	2018

CONFORMS WITH THE ESSENTIAL SAFETY REQUIREMENTS STATED BY APPARATUS DIRECTIVE 2006/42/EC AND PERFORMANCE REQUIREMENTS
COMPLY WITH THE ERP DIRECTIVE 2009/125/CE.

with particular reference to the following provisions:

UNI EN 953:2009, UNI EN ISO 12100:2010, UNI EN ISO 12499:2009, UNI EN ISO 13857:2008, CEI EN 60204-1:2006 (CEI 44-5), UNI EN ISO 5801:2009

Chiusavecchia, 17th May 2018
Massimo Colombo

Legal Representative

1.1 Disclaimer

Munters reserves the right to make alternations to specifications, quantities, dimensions etc. for production or other reasons, subsequent to publication. The information contained herein has been prepared by qualified experts within Munters. While we believe the information is accurate and complete, we make no warranty or representation for any particular purposes. The information is offered in good faith and with the understanding that any use of the units or accessories in breach of the directions and warnings in this document is at the sole discretion and risk of the user.

1.2 Introduction

Congratulations on your excellent choice of purchasing a Munters EC52 fan!
In order to realize the full benefit from this product it is important that it is installed, commissioned and operated correctly. Before installation or using the fan, this manual should be studied carefully. It is also recommended that it is kept safely for future reference. The manual is intended as a reference for installation, commissioning and day-to-day operation of the Munters fans.

1.3 Notes

Date of release: 2018.
Munters cannot guarantee to inform users about the changes or to distribute new manuals to them.

1.4 Data for Fan Eco Design Directive

Product information requirements → (according to *ANNEX I -3.2 of regulation*)	1	2	3	4	optional	5	6a	6b	6c	7	8
Fan description *(1)*	**Overall efficiency η%**	**Measurement category**	**Efficiency category**	**Efficiency grade**	**Target efficiency grade 2015**	**VSD must be installed with the fan**	**Motor power input at optimum energy efficiency [W]**	**Flow rate at optimum energy efficiency [m³/h]**	**Pressure at optimum energy efficiency [Pa]**	**RPM at optimum energy efficiency**	**Specific ratio**
EC52 2.0hp 3ph 50Hz OS	37,2	A	static	41,9	40	no	1.827	30.164	81,1	458	1
EC52 1.5hp 3ph 50Hz OS	33,9	A	static	39,1	40	no	1.546	30.377	62,1	438	1
EC52 1.0hp 3ph 50Hz OS	35,7	A	static	41,7	40	no	1.142	28.982	50,7	383	1
EC52 1.0hp 1ph 50Hz OS	32,3	A	static	38,4	40	no	1.070	24.705	50,4	364	1

** Fans tested are configured according to COMMISSION REGULATION (EU) No 327/2011 of 30th March 2011 - ANNEX II - 1.5. Efficiency values, according to Commission Regulation (EU) 327/2011, refers to exhaust fans only.*

1.5 Attached technical documentation

The listed documentation is to be considered an integral part of this manual:

- technical sheet/electric motor instruction booklet.

1.6 Disposal

Do not dispose of this product with general household waste. This product must be disposed according to the laws governing Waste Electrical and Electronic Equipment. If required, contact your local authorities for information regarding the available disposal facilities.

2. SAFETY ASPECTS

WARNING Failure to respect safety or behavioral rules can produce hazardous situations for users as well as damage to the machine and the place where it is installed. The fan must only be used if it is in perfect operating condition, by personnel who are perfectly aware of the safety measures and possible hazards, and in strict compliance with the instructions given in this manual.

2.1 Personnel requirements

Equipment may only be used by personnel who know and apply the specific requirements given in the user and maintenance manual and the more general instructions contained in various regulations for accident prevention and applicable legislation regarding safety in the workplace, as well as other European Community directives incorporated by the member states into their national legislation.
Knowledge and understanding of the manual and of the attached documents constitute an indispensable tool for reducing hazards and promoting the safety and health of workers.

Personnel training

All operators engaged in the use of the fan must have received adequate information from the employer relating to:

- risks to health and safety at work connected with the use of the machine;
- first aid procedures, fire precautions and evacuation of workplaces;
- devices provided for the safety of operators, and residual risks generated by the machine.

In particular, the employer has the following duties:

- when assigning tasks to operators, to take into account their capabilities in the interests of safeguarding their health and safety;
- to provide adequate means of protection;
- to require compliance by individual operators with the company rules and provisions regarding safety and the use of the collective and individual protective measures at their disposal;
- to ensure that normal and special maintenance operations, or in any event operations necessary for machine safety, are regularly carried out.

All operators must take care of their own safety and health as well as that of other people in the workplace who may be affected by their actions or omissions, in accordance with their personal skills, and the instructions and means provided to them by the employer.

WARNING Unauthorized tampering/replacement of one or more parts of the machine, or the use of accessories, tools or materials other than those recommended by the manufacturer, are prohibited and release the manufacturer from all liability.

WARNING Operators must be trained to deal with the occurrence of possible faults, malfunctions or dangerous conditions to themselves or others, and in such an event must:

- stop the fan immediately by operating the emergency stop device (mushroom-shaped pushbutton/main switch mounted on the electrical panel);
- not carry out operations which are beyond their duties and/or technical knowledge.

2.2 General safety instructions

WARNING

- Safety devices must not be removed or rendered ineffective;
- the fan must not be started with guards removed;
- any adjustment or maintenance operation must be performed with the electrical isolating device activated and locked in position with a padlock;
- any operation is prohibited which may cause arcing or sparks or other situations which could start a fire;
- in the event of alarm signals resulting in the intervention of safety devices, the operator must ask for immediate action by qualified technicians responsible for maintenance;
- user must ensure that the environmental and electricity supply conditions in which the fan operates are always within the limits specified in this user manual;
- do not for any reason modify parts of the fan in order to fit additional devices.

2.3 Safety devices

In the process of designing and building the fan, the manufacturer adopted the necessary technical solutions to ensure compliance with fundamental safety requirements: the object of the risk reduction process was to ensure that the operator can use the fan in safety. The machine is provided with protection devices of fixed type and is fitted with an actuator for the emergency stop function.

Fixed guards

The fixed guards are solidly fixed to the structure of the machine and cannot easily be eluded: the guards are fixed with systems which require the use of tools for dismantling.

WARNING Do not start the fan with fixed guards removed: the guards can only be removed with special tools, by specialized and trained personnel and with the system stationary (emergency system activated and electricity and hydraulic fluid isolated). At the end of maintenance operations, the guards which were removed must be replaced correctly.

Position of guard	Type of guard	Notes
Intake side of fan	Guard of fixed type made of metal mesh.	Dimensions and positioning in accordance with the instructions in the standard UNI EN 13857. Removable only by means of special tool.
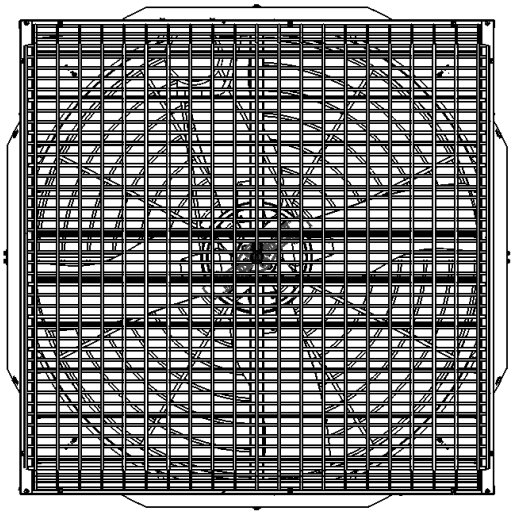 fig.1		
Outlet side of fan	Guard of fixed type made of metal mesh.	Dimensions and positioning in accordance with the instructions in the standard UNI EN 13857. Removable only by means of special tool.

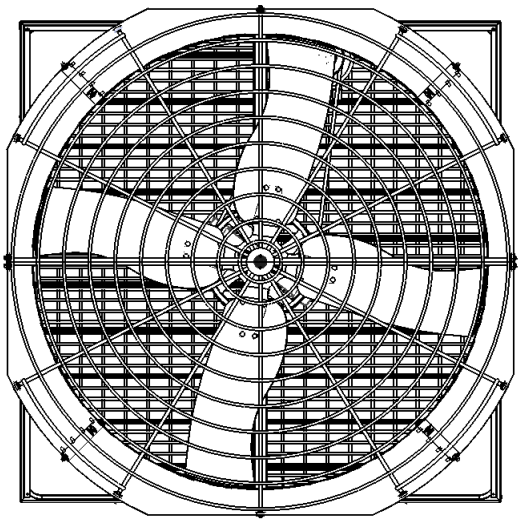

fig.2

Emergency stop function

fig.3

The machine must be equipped at the installation stage with an electrical panel, on which must be installed an actuator for the emergency stop function, which when operated brings dangerous movements to a halt by isolation of the power supply: the button must be mushroom-shaped and coloured red, provided with mechanical restraint and released by turning.

2.4 Residual risks

Mechanical hazards		
Part of machine/stage of use	Description	Plates/provisions/PPE
Installation of machine	Hazard arising from failure to observe ergonomic principles, caused by excessive strain, i.e. generic mechanical hazard during the moving and installing stages of the machine.	 fig.4

Electrical hazards		
System area	Description	Plates/provisions/PPE
Panels, covers and electrical apparatus.	The safety signs must be fixed in an extremely visible position on the door of the electrical panel and on covers containing electrical apparatus, to highlight the risks to which an operator could be exposed in the event of opening the electrical panel (danger resulting from the presence of live parts), the level of voltage present, the prohibition of tampering by unauthorized personnel and the prohibition on the use of liquids on electrical apparatus in the event of fire.	 fig.5

Hazards generated by noise *(measured at 2m distance)*	
Fan model	Sound pressure level Lp [dB(A)]
EC52 - 2 hp	77.5
EC52 - 1.5 hp	77.1
EC52 - 1 hp	76.2

A measurement has been made of the noise produced by the machine during normal operation in order to calculate the equivalent level in conditions of
normal use. These values are shown in the above table. The measurement has been taken according to the UNI EN ISO 11202:2010.

WARNING The user and the employer must comply with current national law in terms of protection against daily personal exposure of operators to noise, by providing the use of personal protective equipment (earmuffs, earplugs, etc.) if necessary, depending on the overall level of sound pressure in the installation area, and the daily personal exposure of the employees. In areas where the overall sound level reaches excessive values, personal protective equipment must be used.

WARNING The fan must only be used if it is in perfect operating condition, by personnel, aged more than 14 years who are perfectly aware of the safety measures and possible hazards, and in strict compliance with the instructions given in this manual.

3. BEFORE USING

3.1 Delivery check

Upon receipt, inspect the fan for external damage and if found, inform the forwarding agent without delay. Check the data on all the rating plates, especially voltage and frequency. Turn the propeller by hand while the fan is switched off to verify smooth rotation of the propeller.

3.2 Packaging and transport of assembled fans

The fan has a self-supporting structure in galvanised steel and it is usually delivered without packaging. Upon request fans can be delivered packed in cardboard boxes.

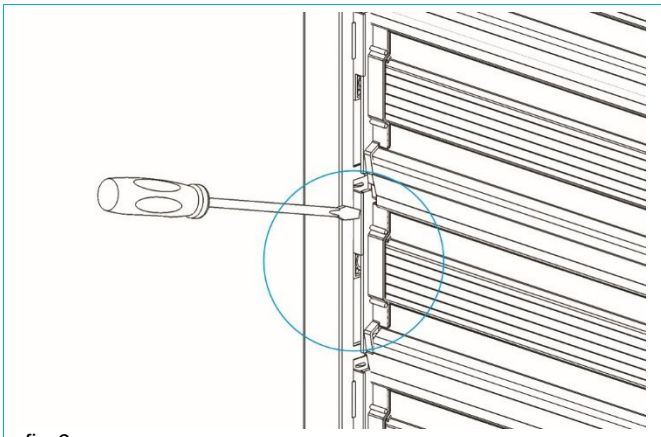

fig.6

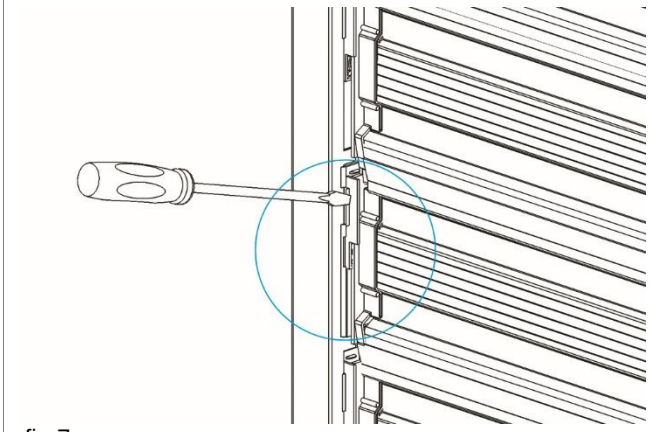

fig.7

Once unpacked check the opening of the shutter manually by rotating the central shutter blade. Verify that during transportation the plastic shutter bearings did not fall off from their operation condition. If yes restore them by mean of a screw-driver and re-check the opening of the shutter.

Follow the steps shown in the pictures.

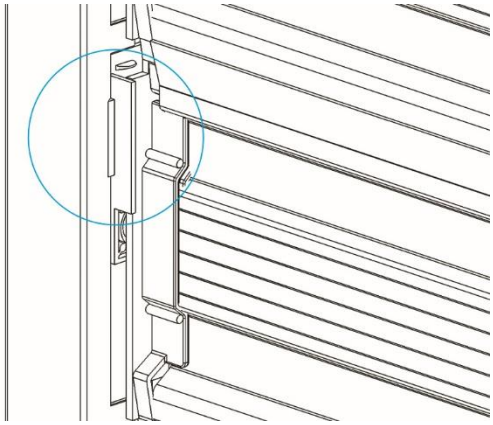

fig.8

Fans should not be permanently stocked one upon the other, regardless if they are delivered with or without packaging. Handling of the fans should not be done manually as the fans have no handles or grips. Consequently, one of the following alternatives should be used:

- forklift: before loading, make sure the forks are opened as much as possible to avoid bending of the fan bottom panel;
- crane: fix two bolts in the M8 bushes situated on the sides of the fan housing and hook the lifting cable over the bolts.

WARNING Make sure a steel cable or rope of adequate size is being used when the fan is lifted by crane. Fan weights are shown in the technical specification table *(see section 7.2)*.

3.3 Structure

The fans consist of the following components:

- fan housing in Munters Protect coated steel without welding spots;
- fan shutter in Munters Protect coated steel, which pivots on UV protected plastic bushes and pins;
- propeller with four blades in stainless or Munters Protect coated steel; blades are fixed to the propeller by high-strength pop rivets;
- motor: single-phase or three-phases; 50 or 60 Hz; B3 form; F class winding insulation, IP55 IEC protective class; asynchronous single-speed;
- centrifugal operated shutter opening device.
- Meshes for protection on back and front side.

4. OPERATING CONDITIONS

4.1 Intended conditions of use

Fans are machines designed for moving air to control temperature and humidity in greenhouses or rearing sheds by extraction, not under pressure. They can even be installed horizontally, without altering or modifying their characteristics.

Normal ambient temperature limits are –15°C to +40°C. Maximum altitude is 1000m above sea level. Should a fan be required to operate at a higher altitude, the loss in mass flow (heat removing capacity) due to lower air density should be taken into consideration.

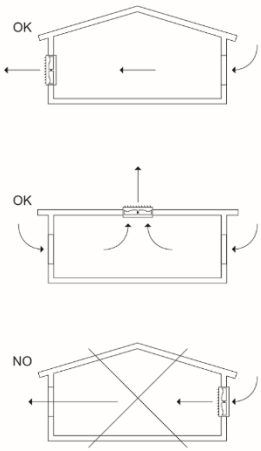

fig.9

The fan has been designed and built to operate in safety for the user, if used according to the conditions intended by the manufacturer and stated in this user and maintenance manual.

NOTE For further information, please refer to the technical documentation attached to this manual.

4.2 Non-permitted conditions of use

Total or partial failure to observe the instructions given in this manual could cause damage to the fan and/or people.

The following uses are to be considered not permitted and improper:

- use in the event of faults and/or tampering with the installed safety devices;
- use by personnel not specifically trained;
- installation of the fan for extraction or circulation under pressure;
- use contrary to existing regulations;

- incorrect installation differing from instructions given in this manual;
- supply from an electrical network with characteristics different from that specified in the wiring diagram;
- total or partial failure to observe instructions;
- insufficient maintenance;
- use of non-original spare parts;
- use of lubricants with characteristics different from those specified in the technical documentation attached to the manual;
- use by minors;
- use under the influence of drugs, alcohol, etc.

WARNING Use of the fan other than as described in the user manual or outside the operational limits laid down by the manufacturer is considered IMPROPER USE. In the event of IMPROPER USE the manufacturer declines all liability in relation to any damage that may be caused to persons or property, and any kind of warranty will be considered invalidated.

Use of non-original spare parts

Original spare parts ensure the reliability and safety of the operation of the fan: in the event of maintenance/replacement, consult the spare parts list, the list of parts and components used and the relevant technical documentation attached to this manual.

WARNING In the event of replacement of safety devices, it is essential to maintain the safety and operational characteristics of the original device, preferring replacement with an identical component.

Insufficient maintenance

A correct normal maintenance is one that maintains the original integrity or restores the fan's efficiency, while at the same time limiting normal deterioration resulting from use.
Special maintenance work can also prolong the usable life of the machine and/or, secondarily, can improve its efficiency, reliability, productivity and ease of maintenance and inspection.

Unauthorized modifications or tampering

No operation is permitted which is aimed at making modifications to the fan and the safety devices fitted to it; similarly, it is not possible to alter its operational and performance characteristics.

WARNING Interference with the command and control circuits is prohibited: such operations could cause damage to the equipment and serious danger to the operator.

NOTE Modifications made to the fan which do not come into the categories of normal and special maintenance, or which alter its operational and performance characteristics, invalidate the machine's compliance with the requirements of the applicable directives, as attested by the manufacturer with the EC declaration of conformity: it is up to the person responsible for the modification to resubmit the machine to the assessment conformity procedures specified in the applicable directives.

Use in a potentially explosive atmosphere

The fan has been designed and built to operate in environments where the presence of a potentially explosive atmosphere is not expected, in other words it is not intended to handle materials which release explosive dust. Emission into the atmosphere of harmful particles or gases must be contained within the limits established by current regulations.

WARNING The fan has been designed and built in such a way that it CANNOT operate in a classified area, according to directive 1999/92/EC.

WARNING The metal sheets used for constructing the fan housing and shutter blades have a surface coating made of an alloy of Zinc, Aluminum and Magnesium, classified as Zm120 (equivalent to 9 µm of coating thickness on each side of the panels) which corresponds to a corrosion resistance in salty mist of 1800 hours.

Whenever it is intended to use the fans in ambients characterized by the presence of particularly aggressive agents (ammonia, clavulanic acid, etc.) the user, before installing the fan at the installation site must verify that the environmental conditions are compatible with the intended use of the materials that compose the fan.

5. INSTALLATION

After fan has been delivered but before fitting and installation, check condition of the consignment: in the event of discrepancy or damage to the machine, the manufacturer or carrier must be informed immediately.

WARNING Fitting and installation of the fan must be performed by specialized personnel, in order to prevent damage to the equipment or hazards to people as a result of faulty fitting.

Fitting the fan must be carried out according to the following stages:

- positioning and anchoring the fan;
- connection to the mains electricity supply;
- operational testing and putting into operation.

5.1 Choice of site and checking installation requirements

The user is responsible for preparing an area suitable for installation of the equipment and complying with the requirements laid down by European directives and national law governing safety at places of work. Environmental conditions for operating the equipment are as follows:

Ambient temperature during operation	Ambient humidity during operation
-15°C / +40°C	< 90%

For operation of fan installation, a manoeuvring area must be made available that is suitable for the fan dimensions and the chosen lifting equipment: electrical points must be provided in the installation area for fan connection to the mains electricity supply.

Irrespective of the place of installation, suitable indelible warning signs are attached to the fan, warning of danger and giving instructions to remain at a safe distance not to place hands inside the shutter and not to run in proximity of the fan.
The warning signs are yellow, self-adhesive and indelible. They are fitted to the front and rear of the fan, and marked with the numbers A-1997 and B-1997 (see fig.10).
The area adjacent to the fan in the premises from which air is being extracted must be kept clear to allow the air to exit freely. It is also prohibited for anyone to remain in this area, because of the presence of organic gases and dust which may be present in the airflow.

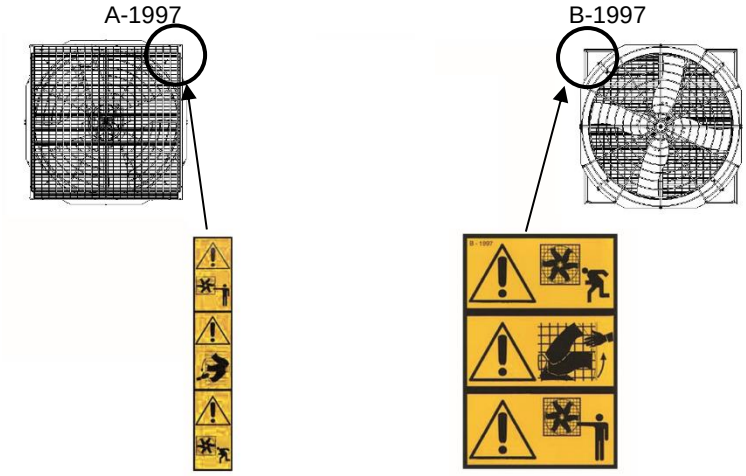

fig.10

5.2 Assembly of the cone

Fans are delivered with the cone disassembled to minimise space usage during transportation. To move the cone to its working position, it is necessary to follow the steps indicated below.

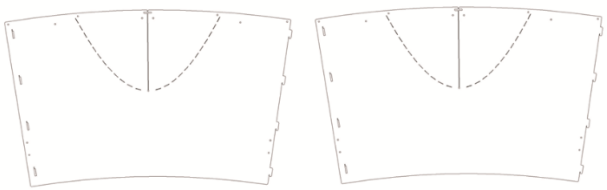 fig.11	1. Take two sectors of the cone, one for each type.
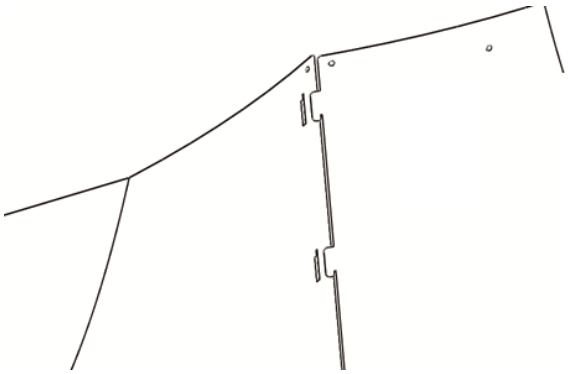 fig.12	2. Align the four fingers of one of the two cone sectors to the respective slot of the other.

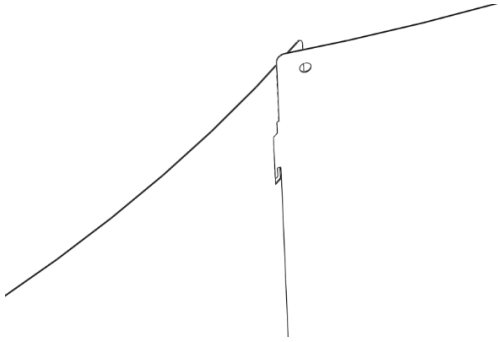 fig.13	3. Insert the fingers in the slots.
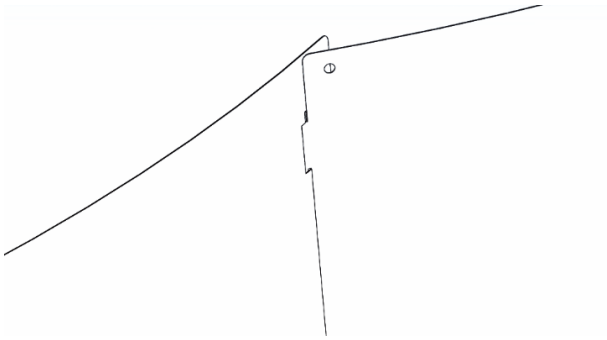 fig.14	4. Slip in the sector with the fingers facing downwards; assuring to aligne the hole for fixing the screw. 5. Repeat from step 2, using the remaining two sectors, steering the fingers on the same side. 6. Close the cone steering the fingers internally.
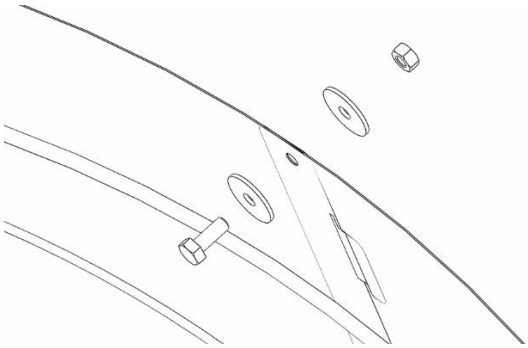 fig.15	7. Bolt the four junction points on the wide area of the cone

 fig.16	8. Place the round mesh on the discharge cone.
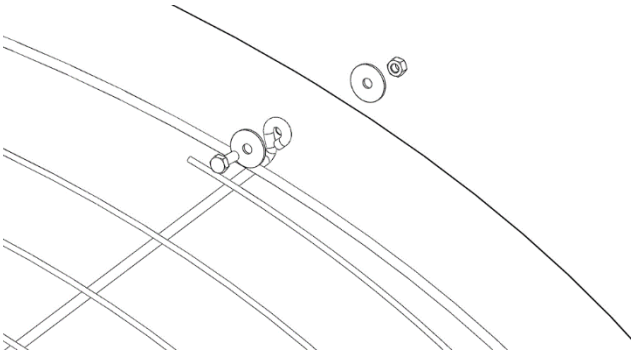 fig.17	9. Bolt all the grommet to the sector. 10. Repeat from step 9 for the latter half a mesh.
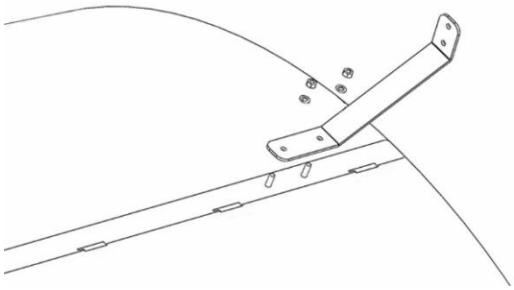 fig.18	11. Mount the four brackets, leaving the M6 screw's head towards the inside of the cone.

5.3 Placement of fans

WARNING There must be no obstacle neither in front or behind the fans. The outgoing airflow must be kept free at least of a length of 3-times fan diameter and the ingoing airflow must be kept free at least in a radius of 1.5 m distance in front of the fan.

Metal structure
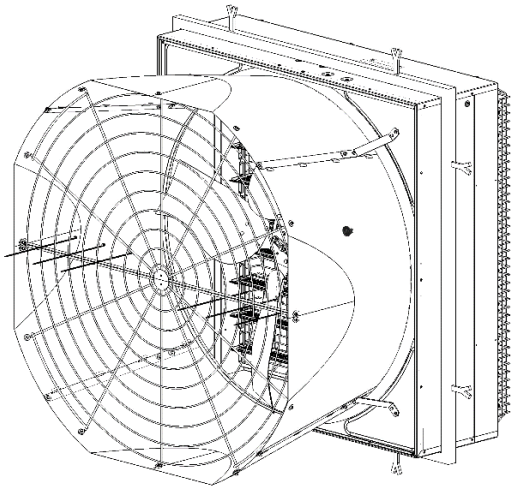 fig.19
Wall structure
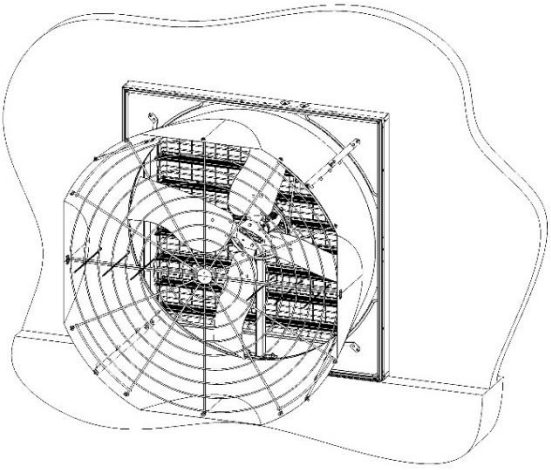 fig.20

WARNING In order to comply with CE regulations, fans should be mounted so that the bottom of the fan is 2.7m or higher from the floor below it. If the fan is to be installed at a lower height it should be equipped with special safety meshes which are available as an optional extra.

Failure to install the safety mesh releases the manufacturer from all liability and shall be considered an improper use of the machine.

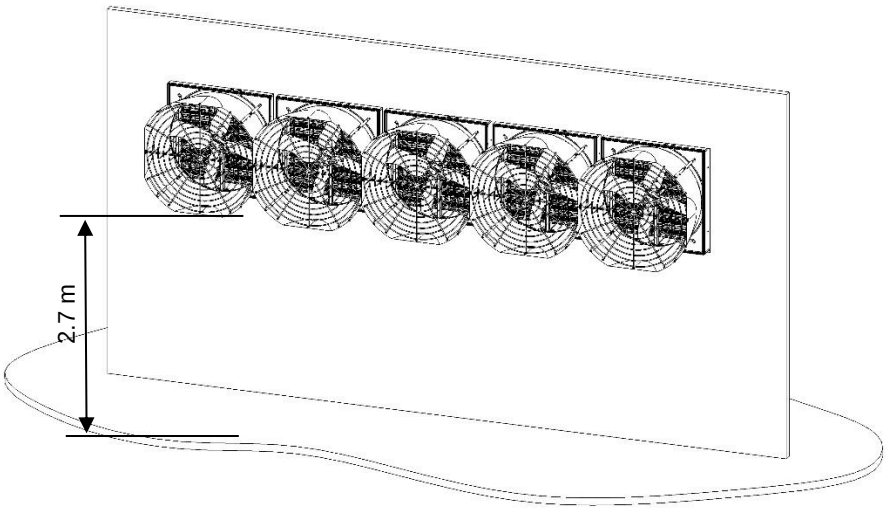

fig.21

WARNING Fans have to be installed taking care to have central support placed in correspondence of a concrete wall or a dedicated metal frame, which has to be strong enough to support the weight of the fan. This is mandatory for guaranteeing the correct functioning of the fans eliminating vibrations and avoiding possible malfunctioning.

5.4 Connection to the electrical system

The fan is supplied without a command and control circuit, but with all the internal electrical connections already made.
At the fitting stage, the installer must set up a control panel in compliance with the requirements of standard IEC EN 60439-1, and arrange the wiring of the fan in accordance with the instructions in standards IEC EN 60204-1 and IEC 60364.
The electrical panel of the fan must generally be equipped with the following devices (bearing EC marking as per directive 2006/95/EC):

 fig.22	Lockable isolating switch.

 fig.23	Magnetothermic switch (chosen to suit the power of the motor). The need to fit a switch of differential type depends on the configuration of the electrical system supplying the fan: it is the installer's responsibility to make this assessment in accordance with the instructions in standard IEC 60364.
 fig.24	Red emergency stop button, mushroom type, provided with mechanical locking and release by turning (in compliance with UNI EN ISO 13850). Operating the button must bring about the electromechanical isolation of the power supply to the electric motor (category 0/1 according to IEC EN 60204-1).
 fig. 25	Start/stop selector switch (with characteristics compatible with the nominal current of the motor), or main panel for managing the equipment, with control devices which act on the electrical supply to the fan.

WARNING Do not supply power to the fan during installation stage.
Installer must issue a declaration of correct installation in accordance with applicable legislation in the country of use.

Connection to the power supply must be done by means of a thermal overload protection switch, whose size depends on motor power. For safety reasons the overload switch can be locked by a padlock, not supplied by Munters.
Electrical earthing must be carried out according to local regulations before the motor is connected to the supply voltage.

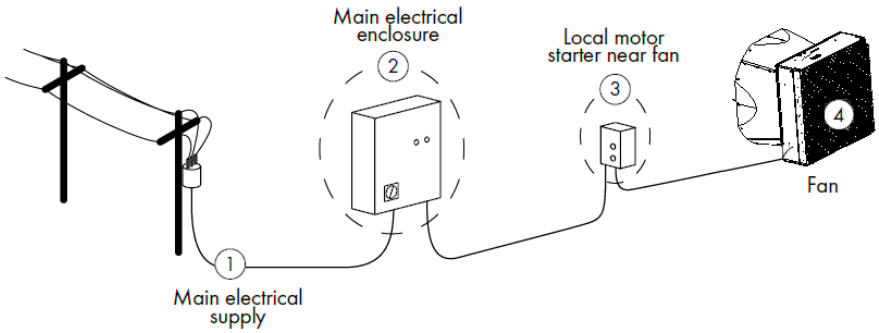

fig.26

Below are suggested wiring diagrams for connecting the fan to the mains electrical supply. These diagrams are however subject to local laws and regulations and should be modified if necessary to comply with such laws and regulations.

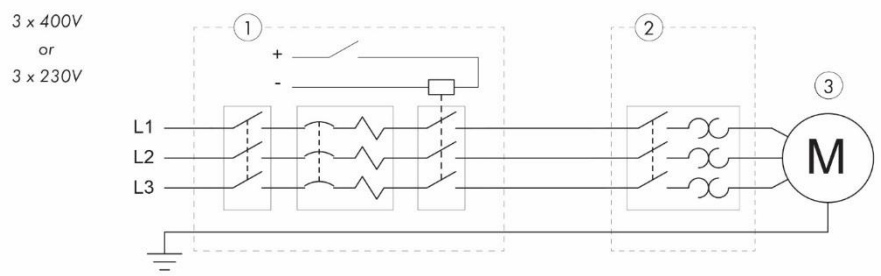

fig.27

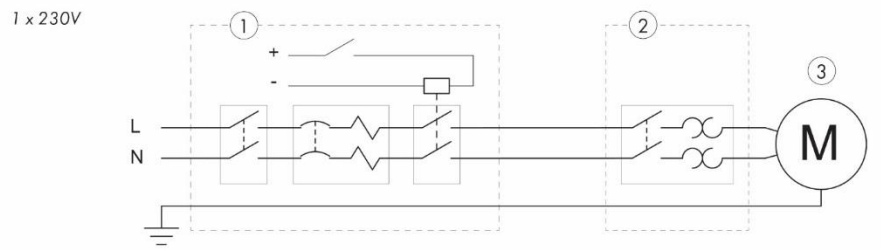

fig.28

1 = Overload protection switch
2 = Circuit breaker
3 = Fan motor

NOTE Failure to operate the fan with an overload protection device will render the motor guarantee null and void. Such motor overload protection devices can be ordered from Munters and be supplied with the fans.

NOTE The connection cable must be completely extracted from the fan housing in order to avoid being damaged by moving parts.

To avoid excessive voltage drop, which can be harmful to electrical motors, care must be taken as to the thickness of cables used as well as the distance (D) from the main electrical enclosure to the motor. In the Table below are the maximum allowable distances.

Motor	Phases	Frequency [Hz]	Voltage [V]	Speed	Current [A]	Cross sectional area of cable		
						1.5 mm^2	2.5 mm^2	4 mm^2
						Maximum allowable length: D [m]		
1 hp / 0.75 kW	3	50/60	230	single	3.5	90	150	240
	3	50/60	400	single	2.0	150	260	400
	3	50/60	200	single	3.9-3.3	80	139	200
	1	50	230	single	5.2	60	100	160
	1	60	230	single	5.6	50	90	140
1.5 hp / 1.1 kW	3	50/60	230	single	4.7-4.2	60	110	160
	3	50/60	400	single	2.8-2.4	100	180	270
	1	50	230	single	7.3	40	70	100
	1	60	220	single	6.6	40	80	100
2 hp / 1.5 kW	3	50/60	200	single	7.6-6.7	40	70	100
	3	50/60	230	single	6.1-5.5	50	90	140
	3	50/60	400	single	3.5-3.2	90	150	240
	3	60	480	single	3.2	90	160	240

Standard fan motors have the following voltage and frequency:
230/400V three-phase 50 or 60 Hz.

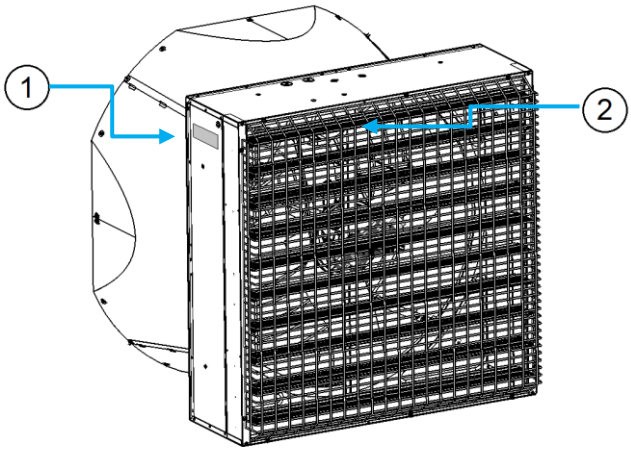

fig.29

Motor specifications are written on the label stuck on the frame and motor (no. 1 and 2 in diagram).

To change the direction of rotation of a three-phase motor it is necessary to change the connection of two of the phases.

WARNING In the event of installations that do not comply with the directions given in this chapter, the manufacturer's liability ceases, along with the validity of the CE Declaration of Conformity.

The electrical lines must be laid in accordance with requirements of the laws applying in the place of installation, and in any event:

- they must be laid with cables of adequate section for the power of the fan and the length of the line itself;
- they must make an effective earth connection;
- they must have isolating devices and automatic protection against overload and short circuits.

Before activating the electrical supply to the machine by turning the isolator switch to position On, a series of checks must be made:

- check that the voltage and frequency of the power source correspond to those indicated in the equipment technical data and electrical diagram;
- check that the supply cables and the conductor providing external protection are correctly connected;
- check that the connections in the control and power circuits are properly tight;
- check that the intensity of the short-circuit expected at the connection terminals is compatible with the breaking power of the protection switch upstream of the electrical panel;

- check that the protection devices (fuses, magnetothermic switches) are correctly sized, and that the phases are connected in the correct order: check that the fan rotates in the direction of the arrow shown on the driven pulley (see fig.30).

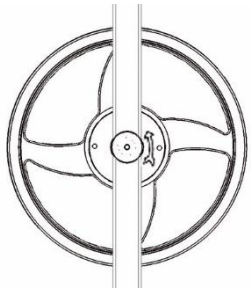

fig.30

Equipotential earthing wiring safeguard

To create effective protection against the risk of electrocution, the outer protection conductor must be connected to terminal PE inside an electrical panel.
For correct sizing of the protection conductors, see following requirements as indicated in standard IEC EN 60204-1:

- phase conductor up to 16 mm^2: section of the protection conductor equal to the section of the supply conductor;
- phase conductor between 16 and 35 mm^2: section of protection conductor equal to 16 mm^2;
- phase conductor over 35 mm^2: section of protection conductor equal to at least half the section of the supply conductor.

WARNING When connecting all the metal masses to the earth system, check that there are no insulating elements between the various conductive masses (metal parts). The system must not be put into operation unless the equipotentiality of the masses and the connection to the earth system have previously been checked.

Protection against contact voltages

The choice of device to protect the electrical system must be made in such a way as to ensure the safe intervention of the main automatic switches and any differential devices linked to them. For an appropriate choice of the type of protection for the machine's supply line, taking into account whether the distribution system is TT or TN, it is advisable to consult an electrical systems designer, in order to ensure compliance with the requirements of standard IEC 64-8 or the equivalent provisions in the country where the machine is being installed.

5.5 Tests and checks before startup

Before startup, it is extremely important to carry out a very careful check of the fan, in order to prevent malfunctions and/or accidents.

In particular, perform the following operations:

1. Equipotential earthing wiring safeguard:
   - check the fan visually, verifying that there are no particular mechanical irregularities or foreign bodies inside the structure;
   - check that the protective structures (fixed guards made of metal mesh) are correctly positioned and fixed;
   - check that the emergency stop function actuator operates correctly.

WARNING Tension the belt after three days of operation: improper tension will lead to premature wear on the transmission devices.

2. Checking the electrical system:
   - check that the supply conductors are properly fixed to the terminals of the isolating switch;
   - check the connections of the conductors in the equipotential earthing wiring safeguard;
   - check that the guards inside the electrical panel are correctly positioned and fixed;
   - check that the safety devices are receiving power and are active, and check their effectiveness.

After this series of checks has been carried out, the fan is ready for its first startup.

WARNING Some models of our fans allow to adjust the number of revolutions through inverter (also called VFD). In case of adjustment made by VFD the installer has to pay particular attention to the following aspects:

- it is necessary that the resistance of the ground line to which the equipment are connected has a very low values (about 15-20 ohm) in order to avoid high currents that can flow through the motor bearings and damage them.
- It is necessary to install the proper line filters, to avoid interference and allow proper operation of the equipment.
- The minimum frequency of operation of the engines in the case of absence of a forced external ventilation is 30 Hz. In the case of an operating frequency below 30 Hz is necessary to provide an external forced ventilation to the engine.

6. COMMISSIONING

WARNING The fan must not be used without first reading and understanding the user manual and becoming completely familiar with the controls.

6.1 Control devices

This chapter gives instructions on the control devices with which the electrical control panel must be fitted, which shall be done at the installation stage.
At the fitting stage, the installer must set up a control panel complying with the requirements of standard IEC EN 60439-1 and arrange the wiring of the fan in accordance with the instructions in standards IEC EN 60204-1 and IEC 60364.
The electrical circuit of the fan must generally be fitted with the devices indicated in section 5.3.

6.2 Instructions for starting up

Before starting the machine:

- check that all the guards for the hazardous areas are in their correct positions;
- check that all the electrical safety components are in place and check their effectiveness by activating them;
- check the presence of the electricity supply.

To start the fan, go through the following procedure:

- turn the isolator switch to position On;
- press the fan starter button.

Normal stopping

In the event of necessity the fan can be stopped by operating the relative control device (stop), which shall be installed on the electrical panel.
Activating this control must cause the fan blade to stop rotating, but does not cause isolation of the power supply: the fan can be started again by pressing the start button.

In the event that the fan does not need to be used for an extended period of time the following stop procedure must be used:

- operate the stop button
- operate the emergency stop button;
- open the main isolator switch (position “0”) on the electrical panel and attach a padlock to the actuator.

WARNING Interrupting the electricity supply, equivalent to isolating by the operator with the main switch, causes complete fan shutdown: restoring the electricity supply will not cause any movement in the machine.

Emergency stop

Operating the main emergency stop button causes the fan to stop moving.

The function is controlled by a red mushroom type button on a yellow background, provided with mechanical locking and release by turning. Operating it causes the instantaneous interruption of the power supply to the electric motor which makes the rotor turn (uncontrolled shutdown category 0 according to IEC EN 60204-1).

Resetting after stopping

1. Resetting after normal stopping

   After normal stopping the operating cycle must be reset by following the procedure described in section 6.1.

2. Resetting after emergency stop

   After an emergency stop, the operating cycle must be reset by following the procedure described below:
   - reset the actuator by which the emergency stop command was given (by turning the relative mushroom button);
   - for an exact reset sequence, refer to the instructions given in section 6.2.

7. TECHNICAL DATA

7.1 Dimensions

Dimensions [mm]								
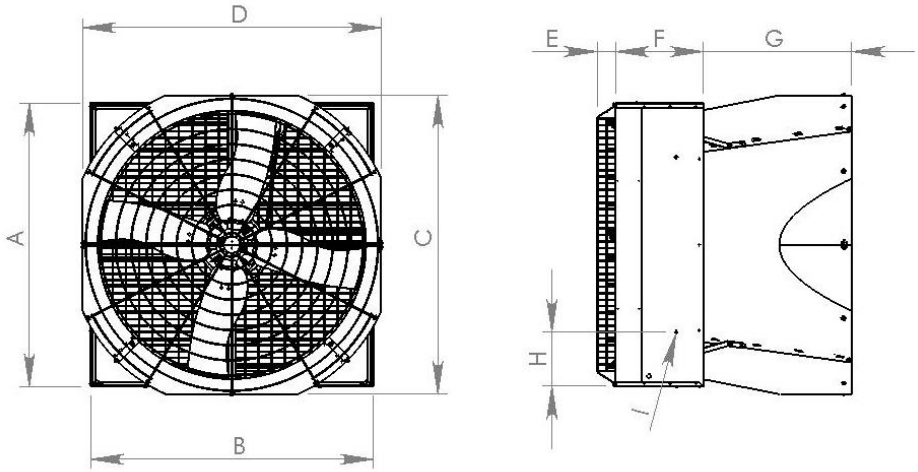 fig.31								
A	B	C	D	E	F	G	H	I
1,425	1,425	1,500	1,500	1,500	445	745	275	M8

7.2 Technical specifications

Technical specifications			
Models	1.0 hp	1.5 hp	2.0 hp
Number of blades	4		
Propeller diameter mm [inch]	1,335 [52]		
Weight of fully equipped fan* [kg]	108	112	112
Airflow at 0 Pa m^3/h [cfm]	42,200 [24,900]	47,570 [27,971]	49,500 [29,100]
Airflow at 25 Pa m^3/h [cfm]	35,100 [20,700]	41,792 [24,574]	44,700 [26,300]
Airflow at 50 Pa m^3/h [cfm]	26,200 [15,400]	33,074 [19,448]	36,400 [21,400]

Specific performance at 0 Pa [cfm/W] $m^3/h/W$	43.7 [25.7]	34.8 [20.4]	32.7 [19.2]
Max. operating temperature °C [°F]	40 [104]		
Max. operating pressure [Pa]	50		
Nominal propeller speed [rpm]	386	438	462
IEC protective class of electric motor	IP55		
Electric motor winding insulation grade	F		

**Excludes safety kit for installation below 2.7m above the floor.*

8. MAINTENANCE

8.1 Introduction

Maintenance must only be carried out by qualified personnel only using suitable tools and working methods. It is mandatory to purchase and use only original spare parts or those recommended by the manufacturer. The use of non-original spare parts or incorrect assembly exonerates the manufacturer from all liability.
Before any maintenance steps are taken, make sure the power switch is in the off position and locked by a padlock. Make sure the propeller is at a complete standstill.

WARNING The capacitor in single-phase motors can retain a charge which appears across the motor terminals even when the motor has reached standstill.

Fans do not contain parts needing periodic lubrication, as moving parts are either manufactured from self lubricating materials, or are sealed with lifetime lubrication.

8.2 Routine Maintenance Program

Following the maintenance program prepared by our experts is the best way to ensure the smooth operation of Munters fans, to improve their performance and to give a longer lifespan.

			ROUTINE MAINTENANCE				
			1 MONTH	2 MONTHS	2 YEARS	4 YEARS	5 YEARS
ACTIVITIES	BELT TENSIONING*	CHECK	✓				
	CLEAR DUST**			✓			
	BELT	REPLACE			✓		
	CENTRAL PULLEY					✓	
	CENTRIFUGAL SYSTEM**						✓
	PLASTIC BEARING**						✓

* *Tighten belt for the first time after fan has been running for 3 days.*

** *No high-pressure water to be sprayed on motors and bearings.*

8.3 Cleaning

Inspect the fan at regular intervals and keep it clean. It is advised to perform periodic cleaning of safety mesh guards. Dust on the safety mesh guards causes extra power consumption; severe dust on the motor can cause overheating and subsequent motor failure.

WARNING Keep motor body clean. Dust deposit on motor body will lead to overheating and failure of bearings and motor itself.
Do not use water for motor cleaning. Use compressed air only. Water spraying will cause rust inside the bearings and lead to their failure.

WARNING We recommend to avoid to use water for washing fans since the electric motors and the bearings of the central hub and centrifugal system support might get damaged by water infiltration. In case there is an unbreakable need to use water for cleaning the fans, the electric motor, the central hub and the centrifugal weight mechanism have to be adequately protected by water sprays.

WARNING All the components and spare parts MUST be storaged in dry and clean environment.

8.4 Belt tensioning check up

Check V-belt tension at regular intervals, the correct tension is obtained when maximum deflection (half-way from motor and central pulley) is about 10 mm, when pushed in by thumb.

WARNING Tighten fan belt after the fan has been running for 3 days. Without adjusting the tension, transmission components can wear out early.

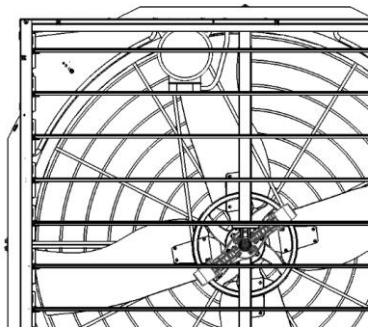

fig.32

To reset the correct tension:

1. open the safety mesh guards;
2. unscrew motor slide fixing screws (without
3. removing them);
4. tighten the V-belt by pushing the motor sideways;
5. tighten the fixing screws adequately;
6. fix the safety meshes guard to the fan housing.

WARNING Do not operate the fan with the safety protections removed: safety meshes can be removed only with specific tools by qualified technicians when the fan reaches a complete standstill.
The fixing sytems of the safety protections are not interchangeable with other devices. Therefore, if for maintenance reasons the user damages or loses any component, this must be definitely ordered from the manufacturer as spare parts and it cannot just be replaced with other components, even similar, not supplied by the manufacturer itself. In this particular event the manufacturer refuses all responsibility on consequent damages caused to things and people and considers any kind of warranty lost.

9. SPARE PART LIST

DETAIL A

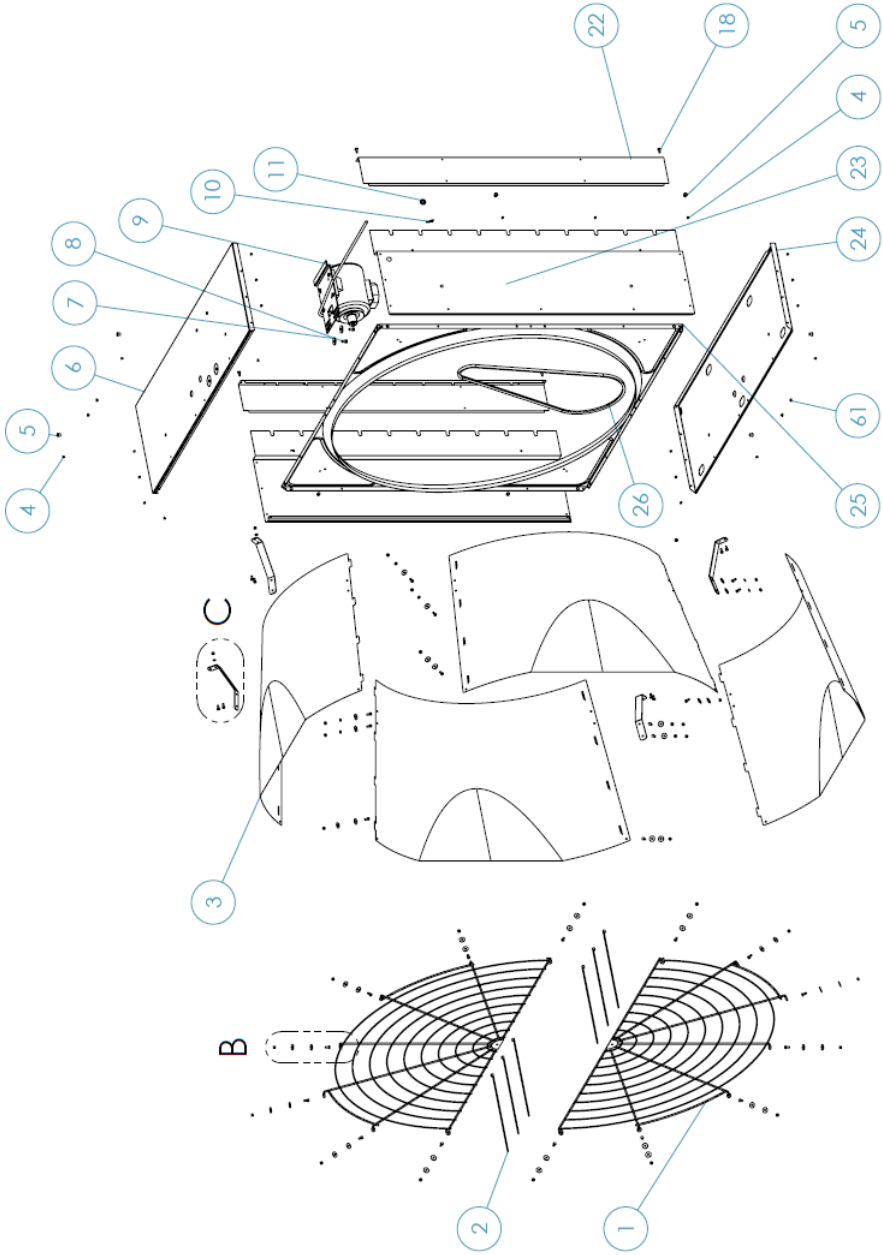

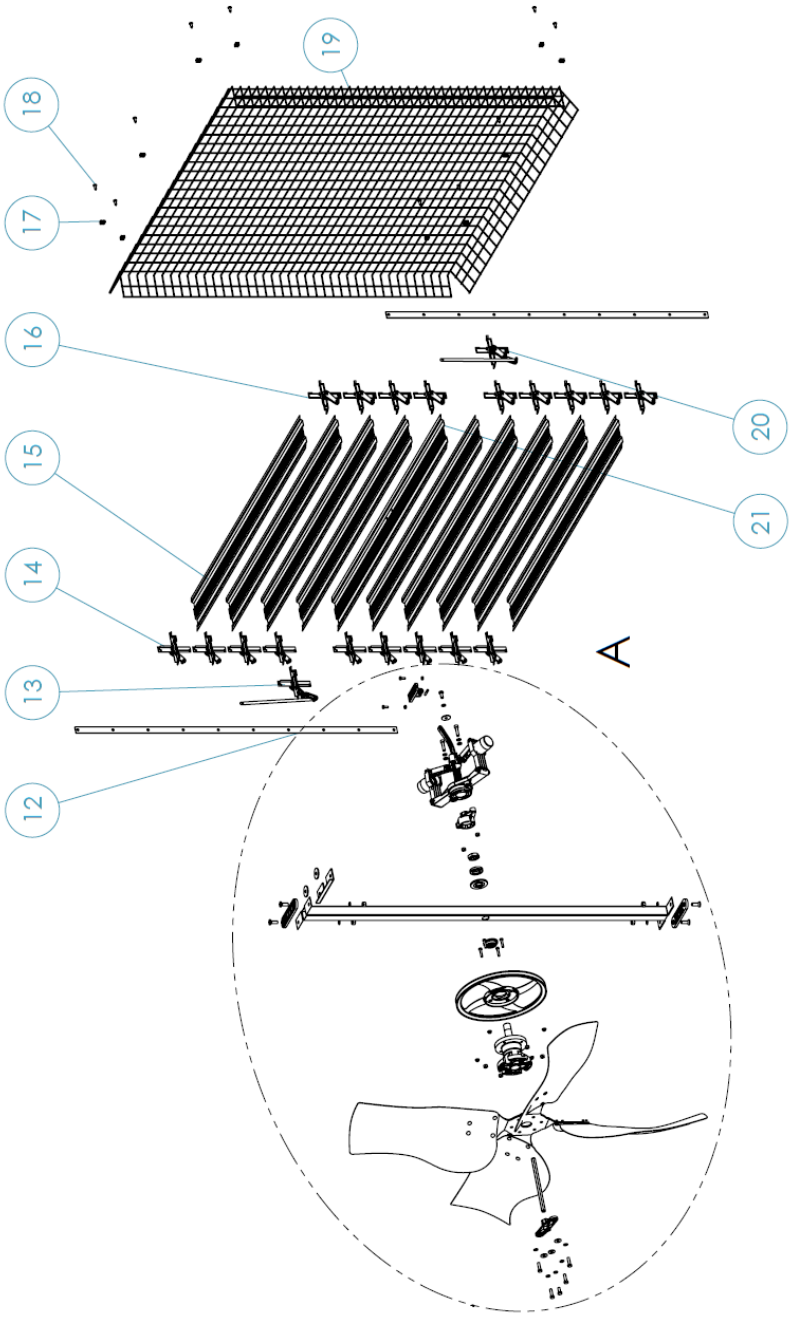
12
13
14
15
16
17
18
19
20
21
A

DETAIL A

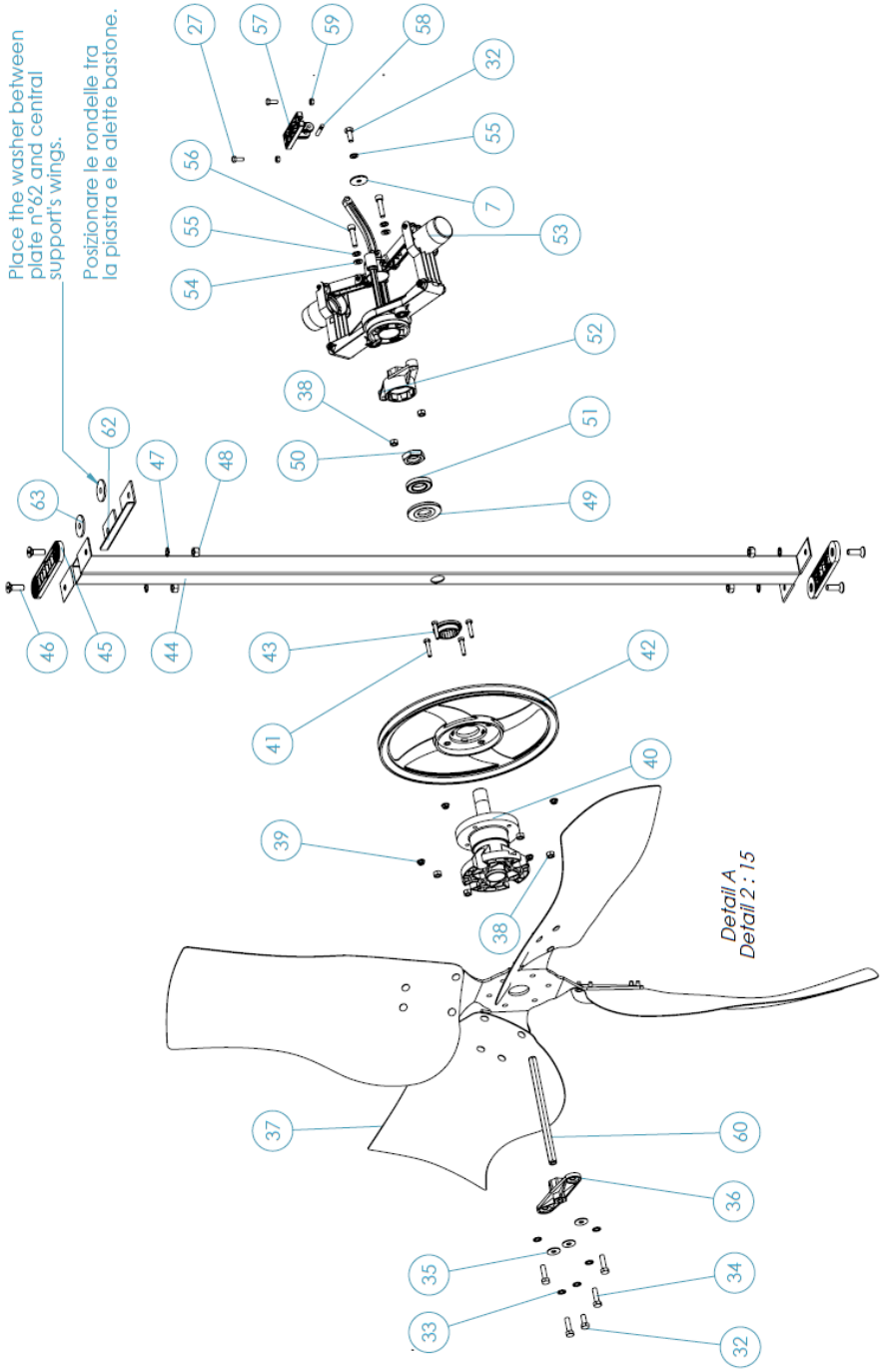
Place the washer between plate n°62 and central support's wings.
Posizionare le rondelle tra la piastra e le alette bastone.
Detail A
Detail 2 : 15
27
57
59
58
32
55
56
7
55
53
54
52
38
51
62
47
48
50
49
63
46
45
44
43
42
41
40
39
38
37
60
36
35
34
33
32

DETAIL B

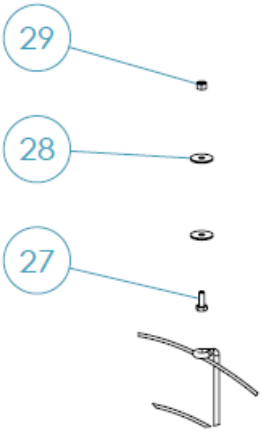

DETAIL C

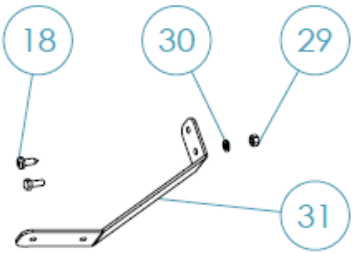

DETAIL D: ALIGNEMENT OF SHUTTER BLADE

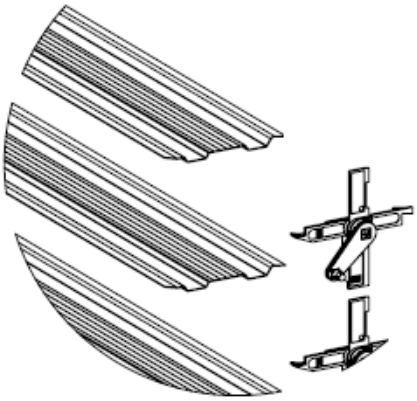

POSITIONING OF FRONT FLANGE

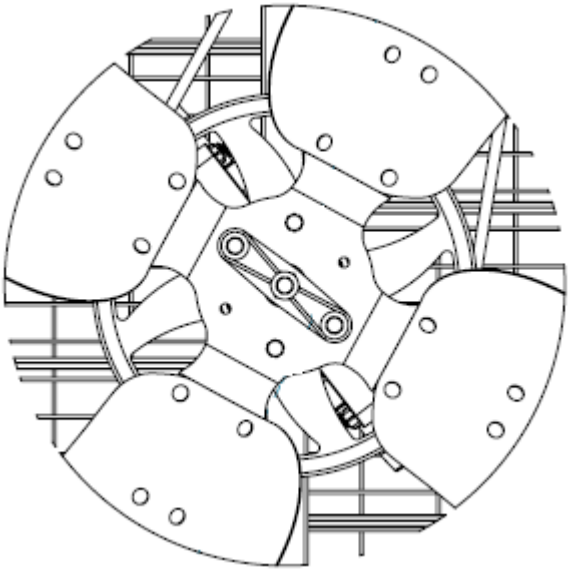

ALIGNEMENT OF WATERPROOF DISTANCE PIECE FOR REAR FLANGE

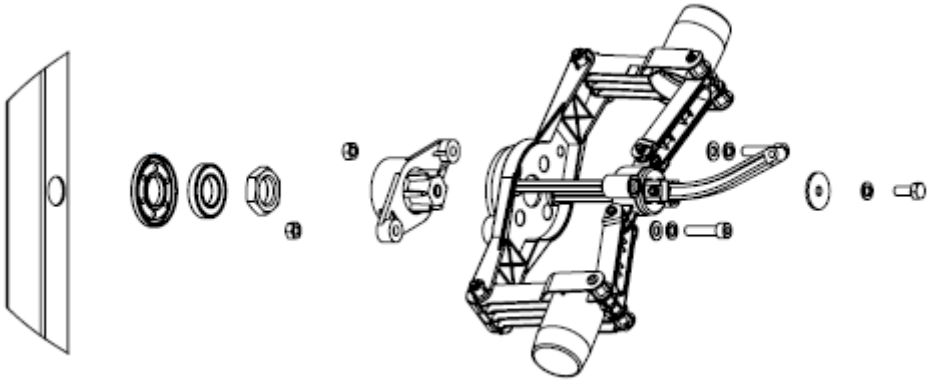

Spare parts

REF.	DESCRIPTION	CODE	QUANTITY
1	ROUND CONE SAFETY MESH	2252567B	1
2	PLASTIC TIE LEGRAND MM9X357	2302000	6
3	CONE SECTOR CUT	2446971	4
4	POP UP RIVET 4.9X7 STEEL	2272100	24
5	THREADED BUSH M8X12.5	2270800	8
6	TOP PANEL	2441170	1
7	Ø8X32 WASHER	2277100	3
8	HEX SCREW M8X16	2280200	2
9	MOTOR	SEE TAB *	1
10	HOOK FOR SPRING	2449150	2
11	RUBBER FOR CABLE	2239600	1
12	PLASTIC TIE ROD	2282052	2
13	CENTRAL PLASTIC BEARING RIGHT	2524501	1
14	PLASTIC BEARING RIGHT	2524101	9
15	SHUTTER BLADE	2439020	9
16	PLASTIC BEARING LEFT	2524301	9
17	METAL CLIP FOR MESH	2448600	10
18	Ø6,3×19 SELF-TAPPING SCREW	2278800	18
19	PYRAMIDAL SAFETY MESH	2823729	1
20	CENTRAL PLASTIC BEARING LEFT	2524701	1

21	CENTRAL SHUTTER BLADE	2439640	1
22	COVER PLATE	2431270	2
23	SIDE PANEL	2435230	2
24	BOTTOM PANEL	2433180	1
25	CONVEYOR	2443780	1
26	V-BELT	SEE TAB *	1
27	M6X16 HEX SCREW	2279100	32
28	Ø6×24 WASHER	2276300	44
29	M6 HEX NUT THICK	2273400	30
30	Ø6 SPRING WASHER	2277700	12
31	CONE BRACKETS	2447050	4
32	HEXAGON SCREW M8X20	2280410	2
33	Ø8 EXTERNAL TOOTHED WASHER	2275100	5
34	HEX SCREW M8X30	2281000	4
35	PLAIN WASHER D8X24	2276800	3
36	FRONT FLANGE W/ BUSHES	2252579	1
37	PROPELLER Zm120	2514497-K	1
38	M8 HEX NUT	2273700	6
39	HEX NUT M6 WITH FLANGE	2282310	4
40	HUB WITH AXLE	2520330	1
41	M6×30 HEX SCREW	2279600	4
42	CENTRAL PULLEY	2248001	1

43	WATERPROOF DISTANCE PIECE	2472000	1
44	CENTRAL SUPPORT	2473720	1
45	PLASTIC OVAL PLATE	2263900	2
46	M10×30 SCREW	2282000	4
47	EXT TOOTHED WASHER D10,5X18	2275300	4
48	M10 HEX NUT	2274000	4
49	WATERPROOF DISTANCE PIECE FOR REAR FLANGE	2252576	1
50	M25 HEX NUT	2273600	1
51	BEARING 16005-2RS	2244520	1
52	REAR FLANGE WITH BUSHES	2252579	1
53	CENTRIFUGAL SYSTEM	2511050	1
54	PLAIN WASHER D8.4X17	2275700	2
55	SPRING WASHER D8	2277400	3
56	HEXAGON SOCKET HEAD CAP SCREW M8X35	2278400	2
57	PLASTIC FORK	2265655	1
58	BRASS PIN	2249650	1
59	HEX NUT M6X5	2270700	2
60	HEXAGONAL AXLE	2252587	1
61	Ø6.4×12.5 POP UP RIVET S.S.	2272200	4
62	REINFORCING PLATE	2447140	1
63	PLAIN WASHER D10X40	2276010	2

** References change depending on the configuration utilized.*

MOTOR PULLEY PITCH DIAMETER / HOLE / V-BELT				
	3 PHASE - ONE SPEED		1 PHASE - ONE SPEED	
	50 Hz	60 Hz	50 Hz	60 Hz
1 hp	90/19/A75	75/19/A74	90/19/A75	75/19/A74
1.5 hp	100/24/A75	80/24/A74	100/24/A75	80/24/A74
2 hp	106/24/A75	90/24/A75	-	-

Requests for technical assistance and spare parts must be made directly to the manufacturer, at the following address:

Munters Italy S.p.A
Strada Piani, 2
18027 Chiusavecchia (IM), Italy
Tel: +39 0183 52 11
Fax: +39 0183 521 333
info@munters.it

Munters EC52 extraction fan is developed and produced by Munters Italy S.p.A., Italy

Ag/MIT/UmGB-2574-05/18 Rev 1.2

Australia Phone 61 2 8843 1594, agh.info@munters.com.au, Brazil Phone +55 41 3317 5050, contato@munters.com, Canada Phone +1 517 676 7070, aghort.info@munters.com, China Phone +86 10 8048 3493, marketing@munters.cn, Denmark Phone +45 98 623 311, aghort@munters.dk, Germany +49 (0) 25 58 - 93 92-0, India Phone +91 20 6681 8900, info@munters.in, Indonesia Phone +66 2 642 2670, info@munters.co.th, Israel Phone +972 3 920 6200, info@munters.co.il, Italy Phone +39 0183 5211, info@munters.it, Japan Phone +81 3 5970 0021, mkk@munters.jp, Korea Phone +82 2 7618 701, munters@munters.co.kr, Mexico Phone +52 818 2625 400, dhinfo@munters.com, Singapore Phone +65 7 446 828, info@munters.com.sg, South Africa and Sub-Sahara Countries Phone +27 11 997 2000, info@munters.co.za, Spain Phone +39 0183 5211, info@munters.it, Sweden Phone +46 8 6266 300, info@munters.se, Thailand Phone +66 2 6422 670, info@munters.co.th, Turkey Phone +90 262 7513 750, info@muntersform.com, USA Phone +1 517 676 7070, aghort.info@munters.com, Export & Other countries Phone +39 0183 5211, info@munters.it

Your closest distributor