1. Basic safety information

	Please read these instructions through carefully and always keep them to hand in the same place, in the vicinity of the system. All persons who operate, clean or maintain the system must be familiar with the contents of these instructions. If these instructions should become damaged or lost it is possible to request a replacement copy from REVENTA®.

These mounting and operating instructions contain the most important information with which to operate the system safely.

1.1 Obligations and liability

Observe the information in the mounting and operating instructions:
A basic prerequisite for the safe handling and fault-free operation of this system is knowledge of the basic safety information and the safety regulations.
These mounting and operating instructions - in particular the safety information - must be observed by all persons who work on this system. Furthermore, the rules and regulations governing accident prevention applicable at the site of installation also apply.

1.1.1 Dangers when handling the system

The exhaust air duct system has been constructed in accordance with the latest engineering practice and the recognised health and safety regulations. However, danger to the life and physical condition of the user or third parties or impairments to the system or other property can occur during its use. The system is only

- to be used for the intended purpose and only
- when in safe and faultless

working order.
Malfunctions that may affect safety must be rectified immediately.

1.1.2 Warranty and liability

Warranty and liability claims in the case of personal injury or material damage are voided if such claims are attributable to one or more of the following causes:

- Inappropriate use of the system
- Unprofessional assembly, commissioning, operating or maintenance of the system
- Operating the system with defective safety equipment, or with safety or protective equipment which has been incorrectly installed or which is not in proper working order
- A failure to observe information in the operating instructions regarding transport, storage, assembly,
- commissioning, operation, maintenance and equipping the system
- Unauthorised modifications to the system
- Unauthorised modification of the exhaust air duct (e.g. drive parameters: capacity and speed)
- Unauthorised changes to a machine or software exclude the manufacturer's liability for any damage resulting from this
- Deficient inspection of system parts that are subject to wear and tear
- Improperly executed repairs
- Disastrous events due to the effects of foreign objects or force majeure.

1.2 Safety symbols

You will come across the following symbols when reading the mounting and operating instructions:

	Warning of general danger
	Warning of dangerous electricity

1.3 Special safety information

The following signs are used for hazards in the mounting and operating instructions:

	Danger	This symbol means an immediate threat of danger to the life and health of personnel. Disregarding these instructions can result in serious health impairments, including life-threatening injuries.
	Attention	This symbol indicates a possible threat to the life and health of personnel or can lead to damage to the system. Failure to comply with these instructions can result in serious health impairments, or can lead to severe material damage.
	Note	This symbol indicates instructions for the effective, economical and environmentally friendly handling of the system. Failure to comply with these instructions can cause machine malfunctions or interference within the system environment.

1.4 Warning and safety information

You will find the following pictograms on your system. These inform you of functional residual hazards when handling your system and provide information to help avoid these hazards.
The information signs must always be clearly visible and must not be damaged. Clean with a solution of water and cleaning agent if dirtied with dust, animal excrement, food remains, oil or grease, etc.
If an information sign is attached to a part that is to be replaced with a new part, ensure this is reattached to the new part.
In addition to the pictograms listed here, other signs may also be attached to this machine or system. The instructions on them must be observed.

1.4.1 Information and meanings of pictograms

The warning signs attached to the machine or system are illustrated with pictograms. The personnel responsible for the operation and maintenance of the system or machine must be well acquainted with the symbols shown on the pictograms. Appearance and meanings are listed below.

Pictogram ISO 11684	Meaning
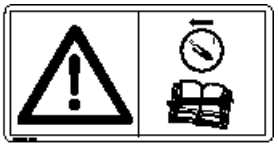	**General danger!** The system switches on automatically. Switch the main switch to "OFF" prior to repair, maintenance and cleaning work.
	Danger due to rotating machine parts! Close safety equipment prior to starting up the system.

1.5 Intended use

The REVENTA® duct must be used only as intended. Any use other than this is considered to be inappropriate use.
The manufacturer accepts no liability for resultant damage; the user bears the risk exclusively. Intended use also includes compliance with the operating, maintenance and servicing instructions specified by the manufacturer.
Comply with the relevant accident prevention regulations and the additional generally recognised occupational health and safety regulations.
Check the safety and functional equipment to ensure that these devices are in safe and good working order:

- Before start up
- At appropriate intervals
- After modifications and servicing.

Observe the provisions of the water and energy suppliers.

1.6 Instructions for use

- In the interests of development, modifications to the design and the technical data are reserved.
- Therefore, no claims may be based on the information, illustrations or drawings and descriptions contained therein. No responsibility is accepted for errors!
- Before commissioning, inform yourself of the assembly procedures, set-up, operation and service.
- As well as the operating instructions and the binding accident prevention regulations applicable in the country of use, please heed the accepted technical rules (safe and professional work in accordance with UVV, VBG, VDE etc.)
- In addition to these operating instructions, please also observe the instructions issued by the manufacturers of components (e.g. sensors).
- The devices may be dangerous if they are used unprofessionally or inappropriately by untrained personnel.
- If any modifications are made to units supplied by Reventa® then this voids all guarantee and legal claims as well as any provision of support by Reventa®.

	Work with and on the devices must be carried out exclusively by persons who are authorised to do so due to their training and qualifications. In addition, these persons must have been tasked with this by the operator.

1.7 Electrical systems

	The installation and the elimination of faults must be carried out by trained specialist personnel exclusively. Take into consideration the valid standards and legal regulations. Prior to installing and commissioning the device read the mounting instructions through carefully. Check the device for any possible damage. Report any damage to your supplier immediately. Never install a damaged device. If a control device is exposed, dangerous electrical voltages are also exposed. Act with an awareness of the dangers and keep colleagues from other departments away from the hazardous area. Do not exceed the connection data! During operation, all control devices and switch or control units must be closed or installed in the switch cabinet. Fuses must always be replaced, never repaired or bridged. Only use the fuses that are specified in the circuit diagram. It is necessary to check that the devices are de-energised using a two-pole voltage tester.
	In order to avoid damage due to ammonia (NH3) vapour, do not install control devices directly in the stable but rather in an anteroom.
	Work on electrical parts/groups must be carried out by an electrician in accordance with the electrical engineering regulations (e.g. EN 60204, DIN VDE 0100/0113/0160). The proprietor or operator is also required to ensure that the electrical systems and operating equipment are operated and maintained in accordance with the respective electrical engineering regulations. For the respective connections please refer to the connection diagram enclosed with the system parts supplied.

All work that takes place outside the framework of system maintenance must be carried out by a specialist. During all work on the device ensure that it is disconnected from the power supply. Check electrical lines for visible damage prior to starting up.
Replace damaged lines and do not start the device prior to this. Instruct an electrician to replace damaged or destroyed connectors.
Do not unplug electrical plugs using the flexible cable.
Covering electric motors may cause heat accumulation with high temperatures, resulting in the operating equipment being destroyed and the possibility of fires starting.

1.8 Installation and maintenance

	Always disconnect the power supply before starting any work on the electrical system.

Installation and repairs must be carried out by persons who provide a guarantee of professional work due to their training or their knowledge and practical experience. Servicing, maintenance and repair works, as well as trouble-shooting work must be carried out exclusively with the system switched off and the motor at a standstill. Only work with suitable tools; where a risk of hand injuries exists wear safety gloves. Following repairs, the user must ensure that the device or machine is in a fully operational condition. It is only permissible to put equipment back into operation once all safety equipment has been reinstalled. Any spare parts must comply with the technical requirements stipulated by the device manufacturer as a minimum. This is ensured for example through the use of original spare parts.

1.9 Cleaning

The cleaning process can be largely divided up into the following phases:
- Removal of general dirt and contaminants
- Application of the cleaning agent
- Taking effect
- Spraying clean

Please refer to the instructions for use and the specifications of the manufacturer, in order to ensure the correct application, time to take effect, concentration and temperature of the cleaning agent. Check the pH value of the product used.
For personal protection use products that are specified by the supplier of the cleaning agent.
The cleaning solution is permitted to have a maximum temperature of 50°C when exiting the spraying lance. A higher temperature can cause serious damage to the apparatus.
The effectiveness and usefulness of cleaning is dependent not only on the pressure and water temperature but also on the manner and method of spraying. Ideally, spraying should take place below an angle of 45°.
Cleaning product residue should be removed from the machines and devices by means of thorough rinsing. This avoids any adverse effect on the disinfection, whilst also preventing the materials from being corroded.
Cleaning the »Heat-X« should take place from inside to outside (always in the opposite direction to the accumulated dirt) and from top to bottom, in order that the dirt can be removed without causing additional dirt to deposit. Hold the jet of the cleaning device vertical to the pipe matrix (heat exchanger) (max. ± 5 degrees deviation), in order to avoid bending the lamella.
The pH value of cleaning products should lie between 4 and 12, otherwise machines and devices may be damaged. Also harmful are disinfectants based on chlorine

1.10 Employment of external personnel

As the supervisor, you are responsible for the safety of external personnel!

Maintenance and service work are frequently carried out by external personnel, who are often unaware of the special circumstances and the dangers that apply.
Inform such persons of the dangers applicable to their respective area of activity in detail.
Check their method of work and intervene in a timely manner where necessary.

1.11 Clothing and equipment for personal safety

When operating, maintaining and cleaning the system, where possible avoid wearing baggy and loose fitting clothing, rings and watches.

Do not allow long hair to come close to moving system parts if this is not tied back. Hair might become caught in moving parts and result in serious injury.

If necessary wear a safety helmet, safety goggles, safety gloves, work shoes, a mask and ear protection when operating, maintaining and cleaning the system.

1.12 CE/EC conformity declarations

The product purchased by you does not fall under the scope of application of the
- 2006/42/EC Machinery Directive
- 2006/95/EC Low Voltage Directive
- 97/23/EC Pressure Equipment Directive

It is therefore not subject to labelling according to these directives and the issuance of an EC Declaration of Conformity is unnecessary. However, combination with further components may result in the product falling under the scope of application of one of the aforementioned EC directives. In this case, the applicable evaluation method for determining EC conformity falls under the responsibility of the manufacturer who has combined the product.

1.13 Ordering spare parts

Operational safety is of the utmost importance!
For your own safety only use original REVENTA® spare parts.
In the case of unapproved or non-recommended external products or modifications (e.g. software, controls) it is not possible to assess whether these may pose a safety risk in conjunction with REVENTA® systems.

When ordering spare parts please quote the article number and the designation of the spare part, (the invoice number on the original invoice) and the type of power supply (e.g. 220/380V-3Ph.-50Hz). The article no. of the fixing set can be found under the following symbol
For example: Art. no. 302100, fix. set »ZED« 1800 a.c.

1.14 Faults and power failure

We recommend the installation of warning systems for monitoring your operating equipment. In this way you protect the animals and in doing so your own livelihood.
In the event of a power failure, the emergency power unit should take over the power supply automatically. Also suitable are emergency power units with a cardan drive for tractor mounting. You can obtain further information on this from your property insurer.

1.15 First aid

For the event of an accident arising a first aid box should always be available in the workplace, unless explicitly specified otherwise. Any used material should be replaced immediately.
If you call for assistance, provide the following information:
- where it happened
- what happened
- how many have been injured
- what risk of injury exists
- who is reporting it!

1.16 Disposal

Once the system installation or repair is complete, dispose of the packaging materials and any waste or residues that cannot be reused in accordance with the legal regulations governing recycling and waste disposal. After decommissioning, dispose of system parts or recycle these in accordance with the legal regulations governing waste disposal.

1.17 Copyright

This manual is protected by copyright. Do not misuse, pass on to third parties or duplicate the information and drawings provided in it without obtaining prior permission. The contents may be amended without prior notice. If you should find any errors or inaccurate information in this manual, we would be grateful if you could inform us of this. All trademarks used in the text or in the drawings are the property of their respective proprietor and have been accordingly marked as protected.

* Copyright 2015 by REVENTA GmbH & Co. KG

Connection examples (Exemplary calculation of required pulling forces)

»**ZEW**« **Profi 2100 automatic opening –** opens by release and spring reinforced

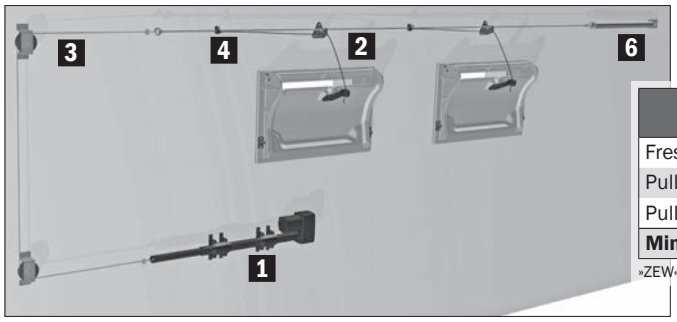

Type	Required quantity / pieces		Pulling forces		Total pulling forces
Fresh air inlets	48	X	35 N	=	**1.680 N**
Pulleys Ø 88 mm	2	X	100 N	=	**200 N**
Pull springs	1	X	160 N	=	**160 N**
Minimum required pulling force:				=	**2.040 N**

»ZEW« Professional 2100 a.o. = 35 N (incl. first deflector)

»**ZEW**« **Professional 2100 automatic closing –** opens by means of traction

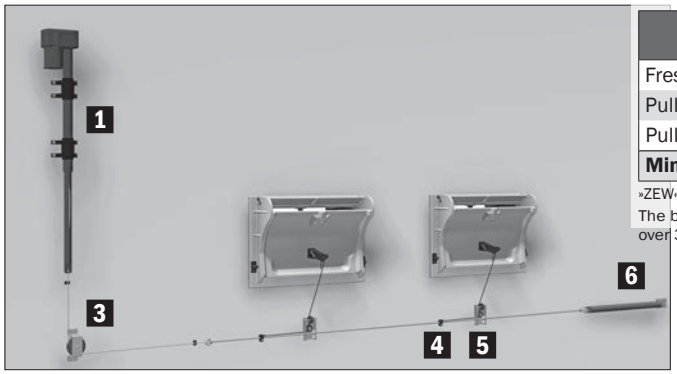

Type	Required quantity / pieces		Pulling forces		Total pulling forces
Fresh air inlets	48	X	65 N	=	**3.120 N**
Pulleys Ø 88 mm	1	X	100 N	=	**100 N**
Pull springs	1	X	160 N	=	**160 N**
Minimum required pulling force:				=	**3.380 N**

»ZEW« Professional 2100 a.c. = 65 N (incl. first deflector)
The breakdown of fresh air inlets into 2 electric motors in the case of pulling forces over 3.000 N is necessary.

»**ZED**« **1800 automatic opening –** opens by release

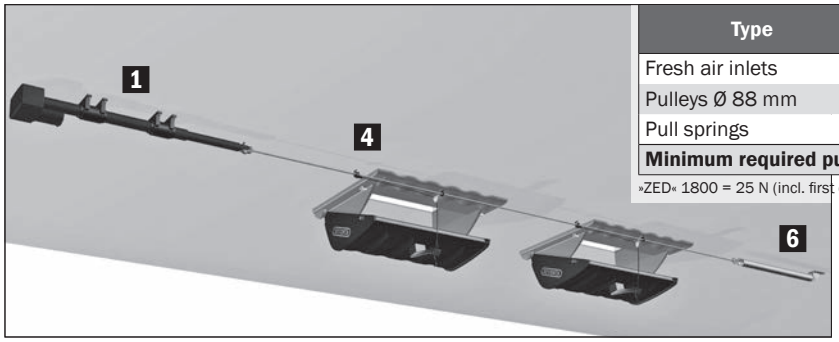

Type	Required quantity / pieces		Pulling forces		Total pulling forces
Fresh air inlets	12	X	25 N	=	**300 N**
Pulleys Ø 88 mm	0	X	100 N	=	**0 N**
Pull springs	1	X	160 N	=	**160 N**
Minimum required pulling force:				=	**460 N**

»ZED« 1800 = 25 N (incl. first deflector)

1 Electric motor
2 Wall guides (Art. no.: 9-201990000)
3 Pulleys Ø 88 mm (Art.-no.: 333211)
4 Pull rod clamps (Art. no: 332030)
5 Universal pulley (Art. no.: 333000)
6 Pull springs (Art. no.: 333050)

Position of the rope guide

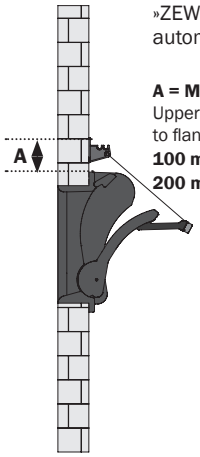

»ZEW« Professional
automatic opening

A = Minimum clearance
Upper wall guide perforation
to flange upper edge
100 mm (»ZEW« Prof. 1300/2100)
200 mm (»ZEW« Prof. 2900)

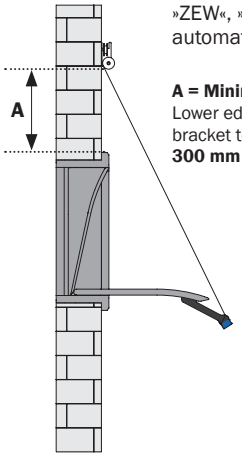

»ZEW«, »safe-let«®
automatic opening

A = Minimum clearance
Lower edge of pulley
bracket to upper edge of flange
300 mm

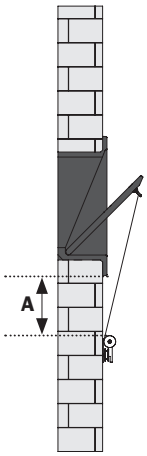

»ZEW« Professional,
»ZEW«, »safe-let«®
automatic closing

A = Minimum clearance
Lower edge of pulley
to upper edge of pulley bracket
200 mm

2. Basic information

In order that no undesirable air exchange takes place and the penetration of daylight is prevented, deformation or deflection of the fresh air inlet should be excluded after its installation. A retrospective deformation of the fresh air inlets can be prevented through their correct installation.

⚠ The fresh air inlets must not be placed under tension. Direct coverage with brickwork can result in destruction.

2.1. Wind/weather protection

Wind/weather protection is indispensable for the functional assurance of a fresh air system and must always be employed if wind, sunlight, or snow and ice may have an adverse effect on the fresh air system.

3. Installation of the fresh air inlets

3.1. Wall air inlets

It is first necessary to establish the wall recess. For the dimensions please refer to the respective mounting instructions (W1 x H1 + 20 mm each). It is advisable to fit a lintel in the wall above the opening.

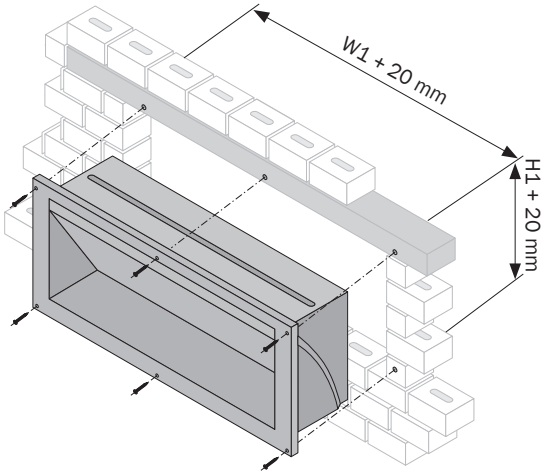

⚠ The fresh air inlets may only be directly covered with bricks when constructing the brickwork if one of the following installation options is used:

- **Wall recess with brick supports**
  Two wedges respectively are clamped between board and bricks from the inside of the wall and from the outside. After completing the brickwork it is possible to simply hammer out the wedges.
- **Wall recess with timber frame**
  Simple timber construction for supporting the upper brickwork.
- **Wall recess with angle**
  (ZEW 2000 »long«, ZEW 2000 »long« with flange)
  By inserting a min. 3 mm thick angle (side length 40 mm) directly behind the flange of the inlet, it is possible to brick the fresh air inlet in without significant tension.

Wall installation

Fit PE edge strips around the outside of the fresh air inlet on the right and left, and above. In this way, any pressure on the fresh air inlet caused by the possible longitudinal expansion of the brickwork due to solar radiation is eased.

The fresh air inlet is inserted in the prefabricated wall recess, aligned and bolted in place (the screws are not included in the assembly kit). In the case of multi air inlets it is advisable to bolt top and bottom with five screws respectively, and the sides with three screws. Next, foam the cavities between the wall and fresh air inlet with low-expansion installation foam. Once the installation foam has hardened, connection to the rope system takes place.

Extension frame

Slide extension frame from outside over the fresh air inlet. Depending on the wall thickness, it is possible to shorten the extension frame first. Next, foam the cavities between the wall and fresh air inlet with low-expansion installation foam. Now pre-drill the flange of the extension frame at the four corners and fix in place in the brickwork with screws.

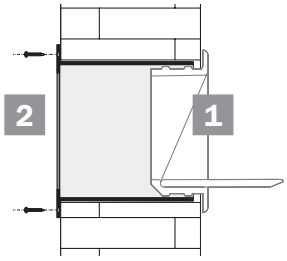

3.2. Ceiling inlets

It is first necessary to establish the ceiling recess. For the dimensions please refer to the respective mounting instructions (W1 x H1 + 20 mm each).

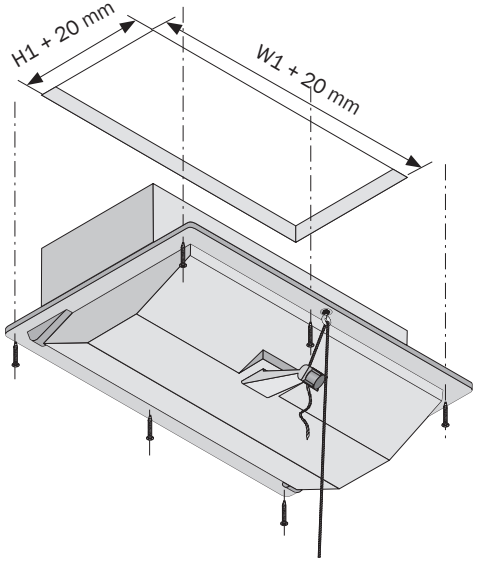

⚠ **»ZED 5000« ceiling recess with timber frame**
In order to install the fresh air inlet »ZED 5000« in a ceiling it is first necessary to install a timber frame, into which the ceiling air inlet can be subsequently installed.

In order that the »ZED 5000« is optimally secured once mounted, it is connected with the timber frame. In order to do this screw two chipboard screws centrally on both inside surfaces through the fresh air inlet and into the timber frame. The screws must not be tightened too firmly, in order to prevent the fresh air inlet from bending.

Ceiling installation

The fresh air inlet is inserted in the prefabricated ceiling recess, aligned and bolted in place (the screws are not included in the assembly kit). Next, foam the cavities between the ceiling and fresh air inlet with low-expansion installation foam.

ⓘ Note! The mounting instructions for REVENTA® products are simply recommendations and are not legally binding. They are based on design data and installation experience. REVENTA® cannot assume responsibility for the system because it solely develops, produces, and supplies components and modules for the fabrication of ventilation and heating systems.

4. Filling heating systems according to VDI 2035

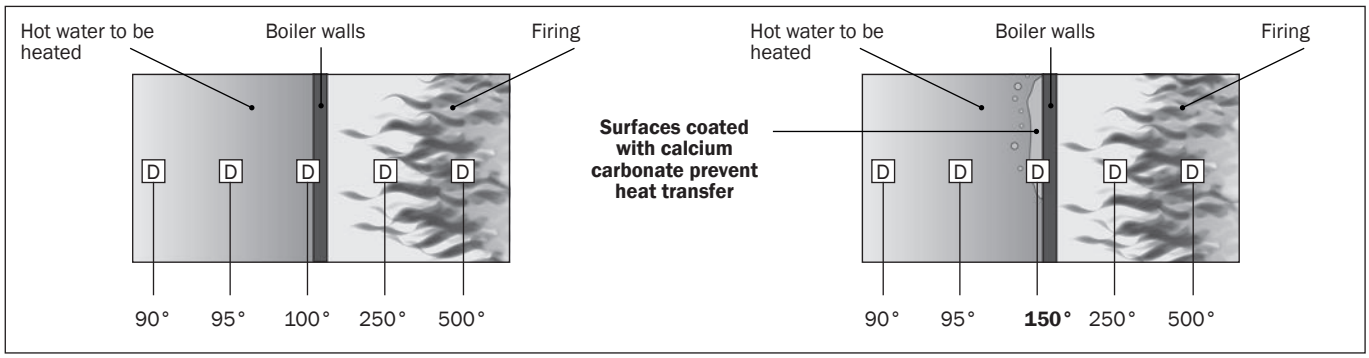

4.1 Avoiding lime precipitation

High temperatures during hot water treatment promote lime precipitation Due to this, lime deposits accumulate at the heat transfer surfaces of the heater. This results in a decrease in efficiency and an increase in energy costs. This is because lime conducts heat 100 times worse than steel and 200 times worse than aluminium. In addition, this can even result in damage to the heat exchangers in a very short period of time. When heating water is not processed, as a rule, the warranty for the heating system becomes void. Therefore, softening the heating water is mandatory.

4.2 Softening according to VDI 2035, Sheet 1

If the drinking water is softened before filling the heating system according to the guidelines of VDI 2035, no lime deposits can form since the hardeners are replaced with sodium ions. Then, instead of calcium hydrogen carbonate, $Ca(HCO_3)_2$, sodium hydrogen carbonate, $NaHCO_3$, is present.

4.3 Avoiding corrosion damage according to VDI 2035, Sheet 2

However, this sodium hydrogen carbonate turns in to a highly soluble, but also very strongly alkalising sodium hydrogen carbonate $NaCO_3$. Thereby, the pH value can significantly exceed the limit of 8.5 described in VDI 2035, Sheet 2 (in the case of aluminium materials). If the recommended pH value is not adhered to, there is the threat of corrosion. Therefore, in addition to softening, the heater filling and make-up water also have to be conditioned accordingly. Only in this way can the specifications of VDO 2035, Sheet 1 and Sheet 2 be truly upheld.

Furthermore, Sheet 2 points out the reduction of the overall salt content (conductivity). The risk of corrosion is considerably less when using desalinated water than is the case during operation with saline water. This is especially true in the case of aluminous components within the heating system.

Even if it is previously softened, drinking water contains dissolved corrosion-promoting salts that act as electrolytes due to the use of various materials in the heating water and therefore accelerate corrosion processes. In the end, this will result in pitting.

With low-salt operation, the aforementioned problems do not even occur since the heating water neither contains any corrosion-promoting salts, such as sulphates, chlorides or nitrates nor alkalising sodium hydrogen carbonate. Fully desalinated water has a very low level of corrosion-promoting properties and furthermore, no lime deposits can form. **For this reason, low-salt operation is recommended with alkalinisation at a pH value of 8.2 to 8.5.** This is the ideal procedure in the case of closed heating circuits. In this way, optimum protection of the entire heating system is achieved.

4.4 Monitoring heating water values

The analytic ascertainment and monitoring of related water values and the added conditioning agents is of crucial importance. Both the amount of filling water as well as the amount of make-up water has to be measured on a yearly basis and documented in an operating manual. In the case of new systems, the first test should take place after eight to ten weeks.

If the indicated maximum limits of permitted water hardness have been exceeded, softening, desalinating or conditioning must be performed.

Overall heating power in kW	Specific system volume		
	< 20 l/kW	≥ 20 to 50 l/kW < 50 l/kW	≥ 50 l/kW
≤ 50	No requirements and in the case of circulation heaters ≤ 3,0 mol/m³ (16.8 °dH)	≤ 2.0 mol/m³ (11.2 °dH)	≤ 0.02 mol/m³ (0.11 °dH)
> 50 to ≤ 200	≤ 2.0 mol/m³ (11.2 °dH)	≤ 1.5 mol/m³ (8.4 °dH)	≤ 0.02 mol/m³ (0.11 °dH)
> 200 to ≤ 600	≤ 1.5 mol/m³ (8.4 °dH)	≤ 0.02 mol/m³ (0.11 °dH)	≤ 0.02 mol/m³ (0.11 °dH)
> 600	≤ 0.02 mol/m³ (0.11 °dH)	≤ 0.02 mol/m³ (0.11 °dH)	≤ 0.02 mol/m³ (0.11 °dH)

4.5 Filling heating systems with distilled (de–mineralised) water

Distilled water

As an alternative to treating the drinking water according to the aforementioned specifications, distilled water can also be used for initial filling of the heating system. Distilled water is free of ions, trace elements and impurities. It is free of salts to a large extent and is therefore characterised by a low level of conductivity. Thereby, absolute attention must be paid to mandatory testing the water related water values eight to ten weeks after start-up, even if initial filling of the heating system is done with distilled water.

4.6 Make-up water from drinking-water treatment plants

Furthermore, so the water values required according to the guidelines in VDI 2035 can be continuously upheld, we recommend treatment of the make-up water by drinking-water treatment plants, for example the WAV – Water heating system from REVENTA®.

»safe-let«® automatically opening

Air conduction sheet, optional

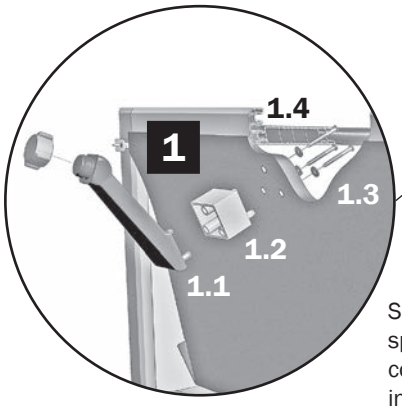

Shutter arm with spacer for the air conduction sheet installation

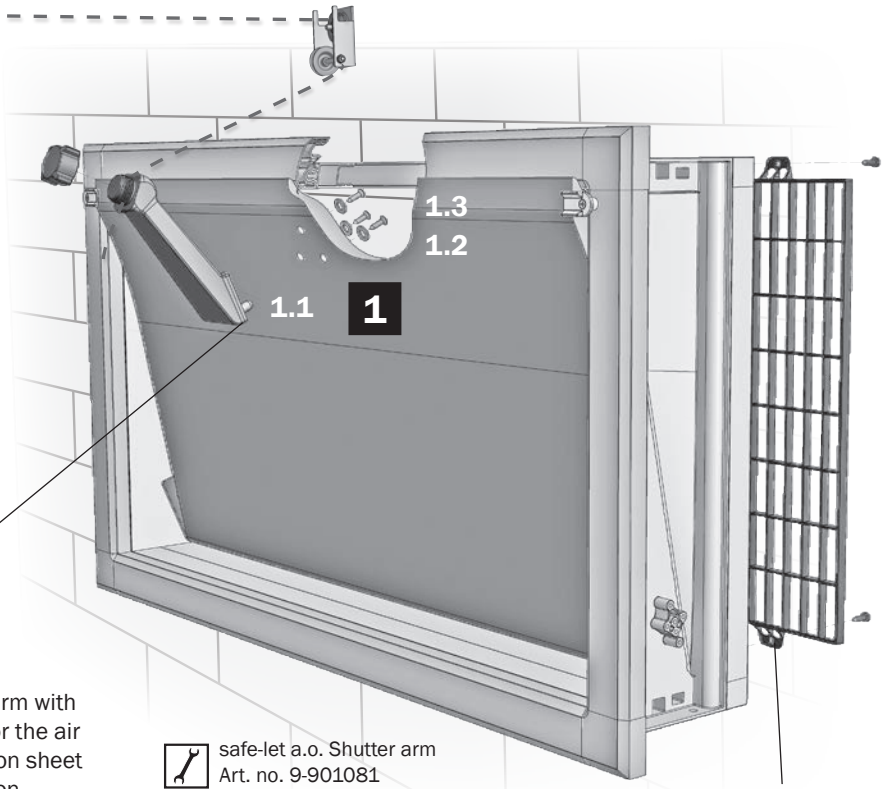

safe-let a.o. Shutter arm
Art. no. 9-901081

safe-let a.c. Eye screw
Art. no. 9-331385

Protective bird grid, optional

»safe-let«® automatically closing

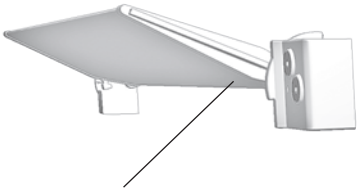

Air conduction sheet, optional

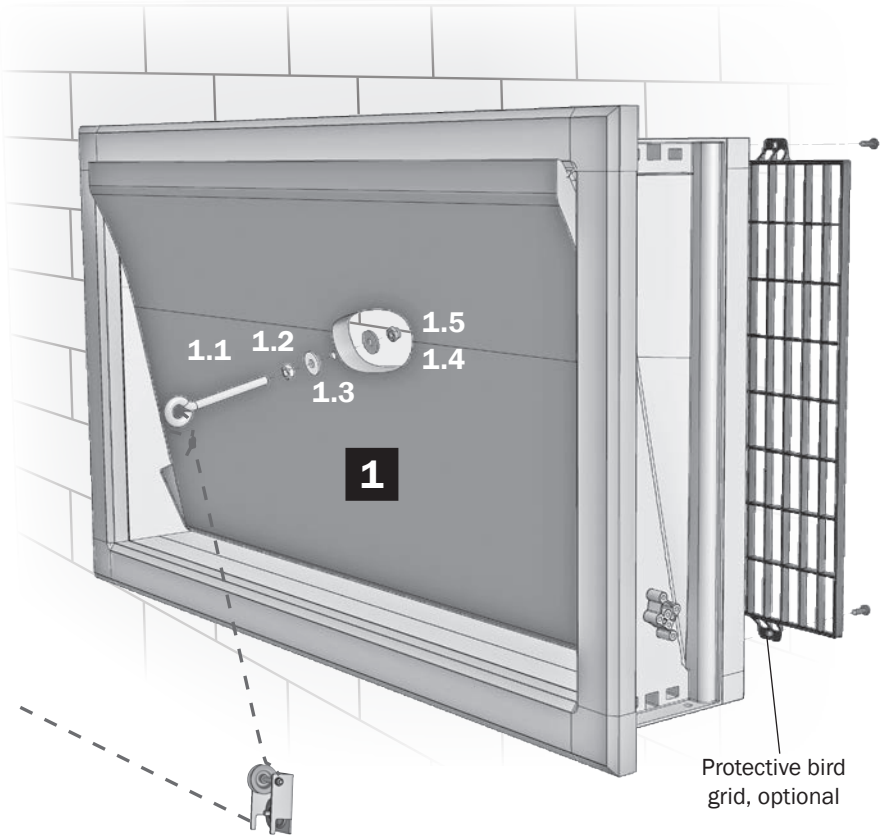

Protective bird grid, optional

Automatically opening: With a shutter width from 800 mm two shutter arms are fitted per shutter. **Automatically closing:** With a shutter width from 1,000 mm two eye screws are fitted per shutter.

Information regarding the installation of the fresh air inlet

First bolt the fresh air inlet to the wall with a countersunk screw max. Ø 5 mm. (Alternatively: Foam in the fresh air inlet fully without screwing). Next, foam the cavities between the wall and fresh air inlet with low-expansion installation foam. The fresh air inlet must not be installed under tension. Direct coverage with brickwork can result in destruction.
In the case of automatically opening fresh air inlets, the rope guide runs from above. The distance between the rope deflector and the upper edge of the fresh air inlet should be at least 300 mm. In the case of automatically closing fresh air inlets, the rope guide runs from below. The distance between the rope deflector and the lower edge of the fresh air inlet should be at least 200 mm.

Note! The mounting instructions for REVENTA® products are simply recommendations and are not legally binding. They are based on design data and installation experience. REVENTA® cannot assume responsibility for the system because it solely develops, produces, and supplies components and modules for the fabrication of ventilation and heating systems.

Catalogue page 2.14

Legend 1 Working step | Fixing set | drilling | gluing, sealing | Note | Attention

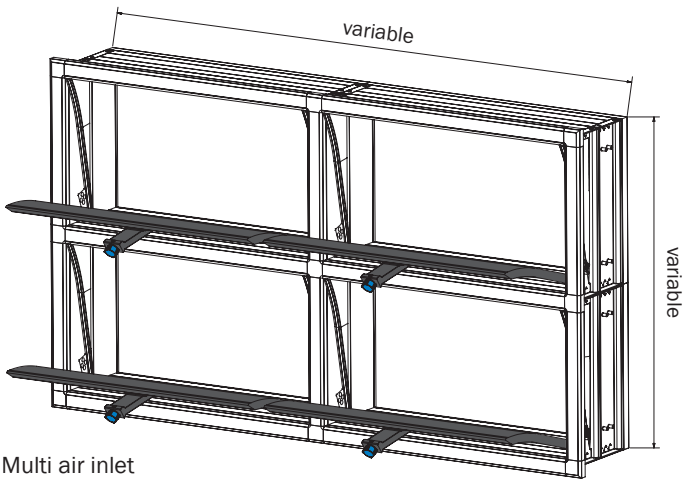

Multi air inlet

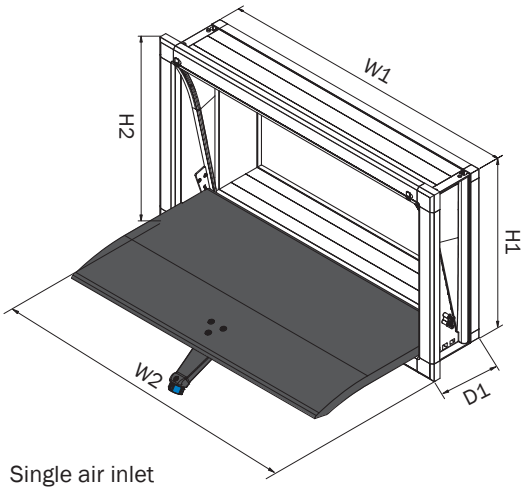

Single air inlet

Type	Element	Article no.	Air capacity**	W1 x H1 x D1 (mm)	W2 x H2 (mm)	Pulling forces	Stroke way (mm)	Weight
»safe-let«® 600 s.ö.	▭	SF1110600	4,200	650 x 480 x 152	700 x 530	35 N	630	7 kg
»safe-let«® 800 s.ö.	▭	SF1110800	5,500	850 x 480 x 152	900 x 530	40 N	630	10 kg
»safe-let«® 1000* s.ö.	▭	SF1111000	6,700	1,050 x 480 x 152	1,100 x 530	45 N	630	12 kg
»safe-let«® 1200* s.ö.	▭	SF1111200	7,900	1,250 x 480 x 152	1,300 x 530	50 N	630	14 kg
»safe-let«® 600 s.s.	▭	SF1120600	4,200	650 x 480 x 152	700 x 530	85 N	280	10 kg
»safe-let«® 800 s.s.	▭	SF1120800	5,500	850 x 480 x 152	900 x 530	80 N	280	12 kg
»safe-let«® 1000 s.s.	▭	SF1121000	6,700	1,050 x 480 x 152	1,100 x 530	75 N	280	15 kg
»safe-let«® 1200 s.s.	▭	SF1121200	7,900	1,250 x 480 x 152	1,300 x 530	70 N	280	17 kg
»safe-let«® 1.200/2 s.ö.	▭▭	SF2111200	14,700	1,250 x 964 x 152	1,300 x 1,014	100 N	630	27 kg
»safe-let«® 1.200/3 s.ö.	▭▭▭	SF3111200	21,300	1,250 x 1,446 x 152	1,300 x 1,496	150 N	630	40 kg
»safe-let«® 1.200/4 s.ö.	▭▭▭▭	SF4111200	27,800	1,250 x 1,928 x 152	1,300 x 1,978	200 N	630	52 kg
»safe-let«® 1.200/2/2 s.ö.	▭▭ ▭▭	SF2211200	28,800	2,504 x 964 x 152	2,554 x 1,014	200 N	630	52 kg
»safe-let«® 1.200/2/3 s.ö.	▭▭ ▭▭▭	SF3211200	44,100	2,504 x 1,446 x 152	2,554 x 1,496	300 N	630	78 kg
»safe-let«® 1.200/2 s.s.	▭▭	SF2121200	14,700	1,250 x 964 x 152	1,300 x 1,014	130 N	430	41 kg
»safe-let«® 1.200/3 s.s.	▭▭▭	SF3121200	21,300	1,250 x 1,446 x 152	1,300 x 1.496	185 N	430	50 kg
»safe-let«® 1.200/4 s.s.	▭▭▭▭	SF4121200	27,800	1,250 x 1,928 x 152	1,300 x 1,978	240 N	430	67 kg
»safe-let«® 1.200/2/2 s.s.	▭▭ ▭▭	SF2221200	28,800	2,504 x 964 x 152	2,554 x 1,014	260 N	430	67 kg
»safe-let«® 1.200/2/3 s.s.	▭▭ ▭▭▭	SF3221200	44,100	2,504 x 1,446 x 152	2,554 x 1,496	370 N	430	100 kg

*From a shutter width of 1,000 mm two shutter arms are supplied and two pulleys are correspondingly required.
**Air flow at 20 Pa in m^3/h; dimensions in mm; a.c. = automatically closing, a.o. = automatically opening

Type	Optional (article no.)	Protective bird grid	Air conduction sheet	Extension frame*	Light filter	Wind deflection hood
»safe-let«® 600		SF1100690V	SF110600	SF1100600	SF330600	138220
»safe-let«® 800		SF1100890V	SF110800	SF1100800	SF330800	138220
»safe-let«® 1000		SF1101090V	SF111000	SF1101000	SF331000	138320
»safe-let«® 1200		SF1101290V	SF111200	SF1101200	SF331200	138420

*The extension frame is attached to the fresh air inlet.
Any number of frames can be combined. Custom widths on request.

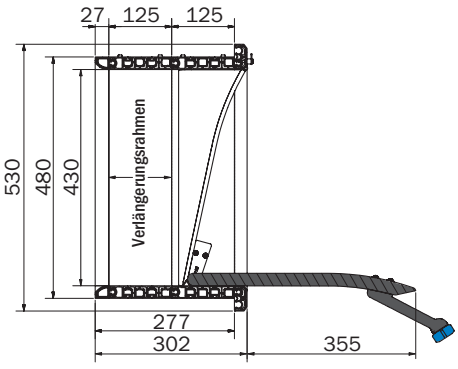

Status 03.04.2013, technical changes and further development reserved