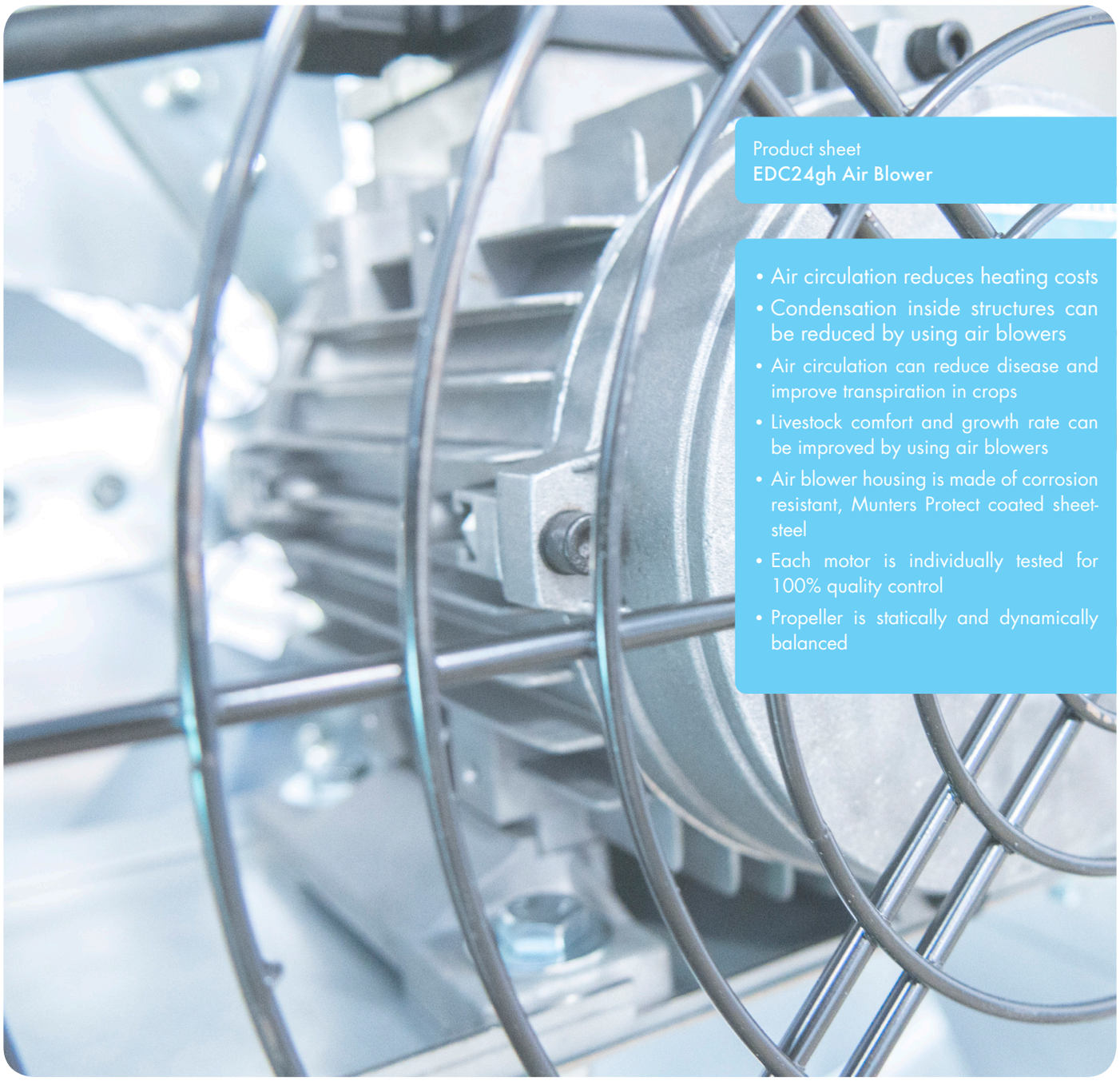

Product sheet
EDC24gh Air Blower

- Air circulation reduces heating costs
- Condensation inside structures can be reduced by using air blowers
- Air circulation can reduce disease and improve transpiration in crops
- Livestock comfort and growth rate can be improved by using air blowers
- Air blower housing is made of corrosion resistant, Munters Protect coated sheet-steel
- Each motor is individually tested for 100% quality control
- Propeller is statically and dynamically balanced

EDC24gh

EDC24gh air blower is developed to break up stratified heat, humidity and stagnant air. The unique propeller design is self-cleaning and, together with airflow rectifiers, allows the highest efficiency to be reached. The round housing and air flow rectifiers are made of a strong Munters Protect coated sheet-steel. The 6-blade propeller is statically and dynamically balanced for low noise and low vibration. To improve aerodynamic efficiency, the air blower has been developed in the R&D test chamber of Munters, which has been built according to ANSI/AMCA 210-85 Figure 15 specifications.

EDC24gh

Munters Italy S.p.A.
Strada Piani 2, IT-18027 Chiusavecchia, Italia / Tel. +39 0183 52 11 / Fax +39 0183 521 333 / munters.com

Munters

Dimensions

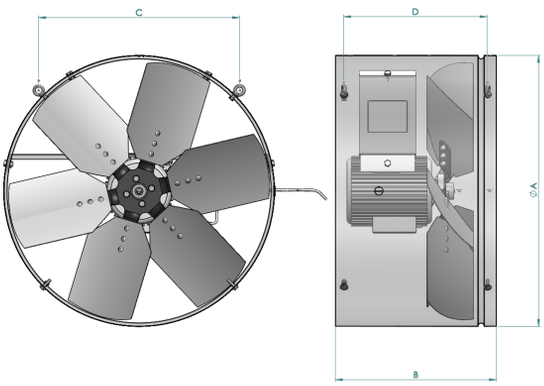

A	B	C	D
620	370	580	330

Technical specifications EDC24gh

Weight of fully equipped air circulator*	[kg]	22
Nominal propeller speed 50/60Hz	[rpm]	900/1,100
Airflow at 0 Pa*	[m3/h] [cfm]	8,362 [4,917]
Specific performance at 0 Pa*	[m3/Wh] [cfm/W]	15.3 [9.1]
Propeller diameter	[mm] [inch]	600 [24]
Number of blades		6
IEC protectice class of electric motor		IP55
Electric motor winding insulation grade	m	F
Max noise level at 1.95m		76.5

** All values refer to 3 phases 50Hz single speed motors.*
Note: airflow data are measured at standard conditions (20°C, 1,013hPa)

EDC24gh Circulator Fan is developed and produced by Munters Italy S.p.A, Italy

www.munters.com
Australia Phone +61 2 8843 1594, agh.info@munters.com.au, Brazil Phone +55 41 3317 5050, contato@munters.com, Canada Phone +1 517 676 7070, aghort.info@munters.com, China Phone +86 10 8048 3493, marketing@munters.cn, Denmark Phone +45 98 623 311, aghort@munters.dk, Germany Phone +49 2558 9392-0, info.reventa@munters.de, India Phone +91 20 6681 8900, info@munters.in. Israel Phone +97 2 39206200, info@munters.co.il Italy Phone +39 0183 5211, info@munters.it, Japan Phone +81 3 5970 0021, mkk@munters.jp, Korea Phone +82 2 7618 701, munters@munters.co.kr, Mexico Phone +52 818 2625 400, dhinfo@munters.com,South Africa and Sub-Sahara Countries Phone +27 11 997 2000, info@munters.co.za Spain Phone +39 0183 5211, info@munters.it, Sweden Phone +45 98 623 311, aghort@munters.dk, Thailand Phone +66 2 6422 670, info@munters.co.th, Turkey +90 216 594 18 65 info@muntersform.com, USA Phone +1 517 676 7070, aghort.info@munters.com, Export & Other countries Phone +39 0183 5211, info@munters.it

Munters

Your closest distributor

Ag/MIT/PIEN-2657-05/17 Rev. 1.1

Munters reserves the right to make alterations to specifications, quantities, etc., for production or other reasons, subsequent to publication.
© Munters AB, 2018